GIL Tajhiz Tahvieh Company / Rasht - Iran
WWW.GILTAJHIZ.ir _ Tel: +98911 431 0051

Performance range

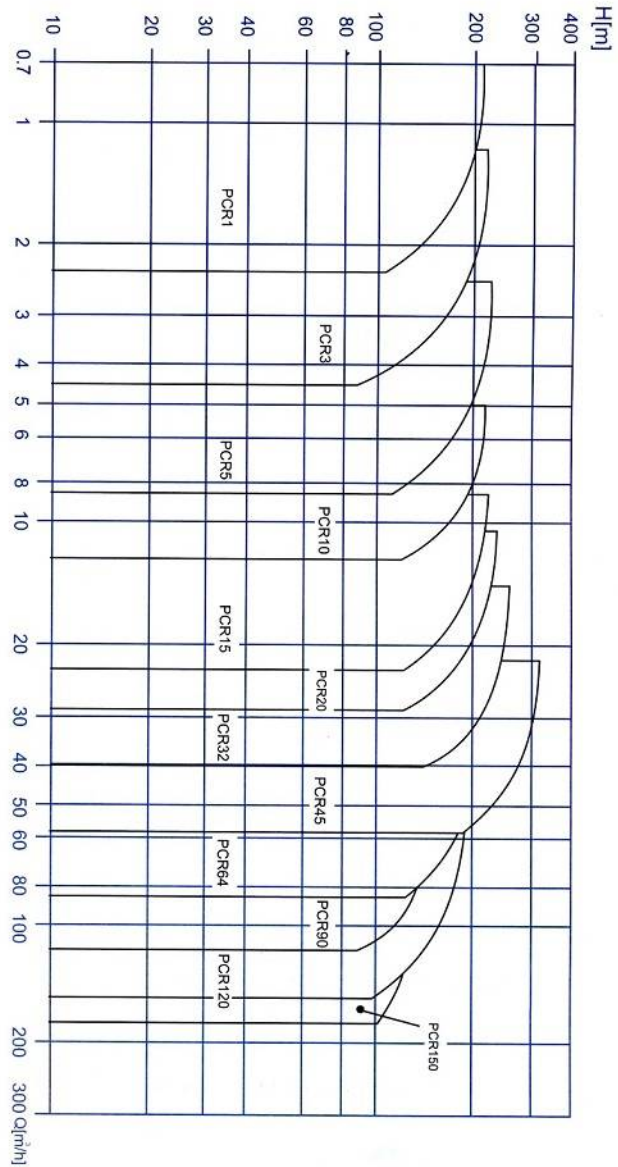

GIL Tajhiz Tahvieh Company / Rasht - Iran
WWW.GILTAJHIZ.ir _ Tel: +98911 431 0051 _

Maximum operating and inlet pressures

Pump size	Stages	Maximum Operating Pressure	Stage	Maximum Inlet Pressure
PCR 1	2-36	25bar	2-36	10bar
PCR 3	2-36	25bar	2-29	10bar
			31-36	15bar
PCR 5	2-36	25bar	2-16	10bar
			18-36	15bar
PCR 10	1-16	16bar	1-6	8bar
	17-22	25bar	7-22	10bar
PCR 15	1-10	16bar	1-3	8bar
	12-17	25bar	4-17	10bar
PCR 20	1-10	16bar	1-3	8bar
	12-17	25bar	4-17	10bar
PCR 32	(1-1)-7	16bar	(1-1)-4	4bar
	(8-2)-14	30bar	(5-2)-10	10bar
			(11-2)-14	15bar
PCR 45	(1-1)-5	16bar	(1-1)-2	4bar
	(6-2)-11	30bar	(3-2)-5	10bar
	(12-2)-(13-2)	33bar	(6-2)-(13-2)	15bar
PCR 64	(1-1)-5	16bar	(1-1)-(2-2)	4bar
	(6-2)-(8-1)	30bar	(2-1)-(4-2)	10bar
			(4-1)-(8-1)	15bar
PCR 90	(1-1)-4	16bar	(1-1)-1	4bar
	(5-2)-6	30bar	(2-2)-(3-2)	10bar
			3-6	15bar
PCR 120	1-7	30bar	1-(2-1)	10bar
			2-(5-1)	15bar
			(6-1)-7	20bar
PCR 150	(1-1)-6	30bar	(1-1)-1	10bar
			(2-1)-(4-1)	15bar
			(5-2)-6	20bar

*Rule to follow: The inlet pressure + the pressure against a closed valve < Max. Operating pressure

GIL Tajhiz Tahvieh Company / Rasht - Iran
WWW.GILTAJHIZ.ir _ Tel: +98911 431 0051

Construction

PCR-1,3,5,10,15,20

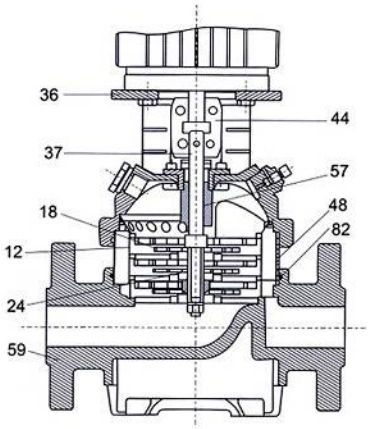

Pos.	Name	Material	PCR 1,3,5,10,15,20	
			Standard	
			Europe	USA
36	Pump head	Cast Iron	EN-GJL-200	ASTM 25B
56	Pump head cover	Stainless steel	N/A	
18	Impeller	Stainless steel	1.4301	AISI 304
37	Shaft	Stainless steel	1.4057	AISI 431
48	Outer Sleeve	Stainless steel	1.4301	AISI 304
82	O-ring for outer sleeve	EPDM		
12	Chamber	Stainless steel	1.4301	AISI 304
24	Neck ring	RTFE		
59	Base	Cast Iron	EN-GJL-200	ASTM25B
	Base	Stainless steel	N/A	
62	Base plate	Cast Iron	N/A	
44	Coupling	Fe-Cu-C	SINT C11	MPIF FC0525
57	Mechanical seal	Cartridge type		

Vertical Multistage Centrifugal in - line Pump

Construction

PCR-32,45,64,90

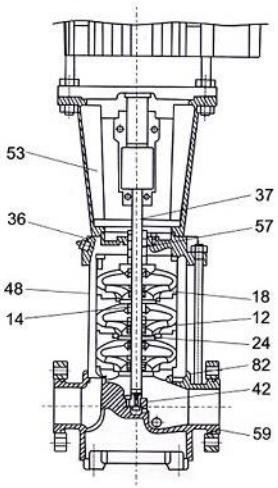

Pos.	Name	Material	PCR 32,45,64,90 Standard	
			Europe	USA
36	Pump head	Cast Iron	EN-GJL-250	ASTM 35B
		Stainless steel		
53	Motor Bracket	Cast Iron	EN-GJL-250	ASTM 35B
18	Impeller	Stainless steel	1.4301	AISI 304
37	Shaft	Stainless steel	1.4057	AISI 431
48	Outer Sleeve	Stainless steel	1.4301	AISI 304
82	O-ring for outer sleeve	EPDM		
12	Chamber	Stainless steel	1.4301	AISI 304
24	Neck ring	Carbon Fiber + POB + PTFE		
59	Base	Cast Iron	EN-GJL-200	ASTM25B
	Base	Stainless steel	N/A	
62	Base plate	Cast Iron	N/A	
57	Mechanical seal	Cartridge type		
14	Bearing ring		Bronze	
42	Bottom Bearing ring	Tungsten carbide Tungsten carbide		

GIL Tajhiz Tahvieh Company / Rasht - Iran
WWW.GILTAJHIZ.ir _ Tel: +98911 431 0051

Construction

PCR-120,150

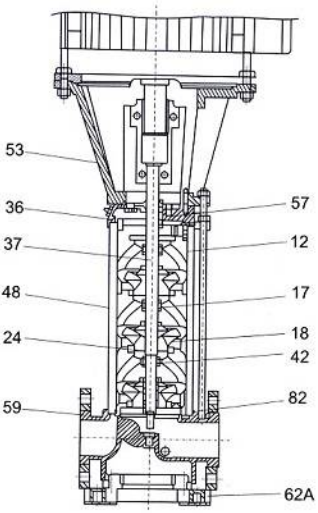

Pos.	Name	Material	PCR 120,150 Standard	
			Europe	USA
36	Pump head	Cast Iron	EN-GJL-250	ASTM 35B
		Stainless steel		
53	Motor Bracket (15HP~60HP)	Cast Iron	EN-GJL-250	ASTM 35B
	Motor Bracket (75HP~100HP)	Cast Iron	EN-GJS-450-10	ASTM 65-45-12
17	bearing ring	PTFE		
18	Impeller	Stainless steel	1.4301	AISI 304
37	Shaft	Stainless steel	1.4057	AISI 431
48	Outer Sleeve	Stainless steel	1.4301	AISI 304
82	O-ring for outer sleeve	EPDM		
12	Chamber	Stainless steel	1.4301	AISI 304
24	Neck ring	PTFE		
59	Base	Cast Iron	EN-GJL-250	ASTM35B
		Stainless steel	N/A	
62	Base plate	Cast Iron	N/A	
62A	Base plate	Cast Iron	EN-GJS-450-10	ASTM 65-45-12
57	Mechanical seal	Cartridge type		
42	Bottom bearing ring	SiC/SiC		

GIL Tajhiz Tahvieh Company / Rasht - Iran
WWW.GILTAJHIZ.ir _ Tel: +98911 431 0051 _

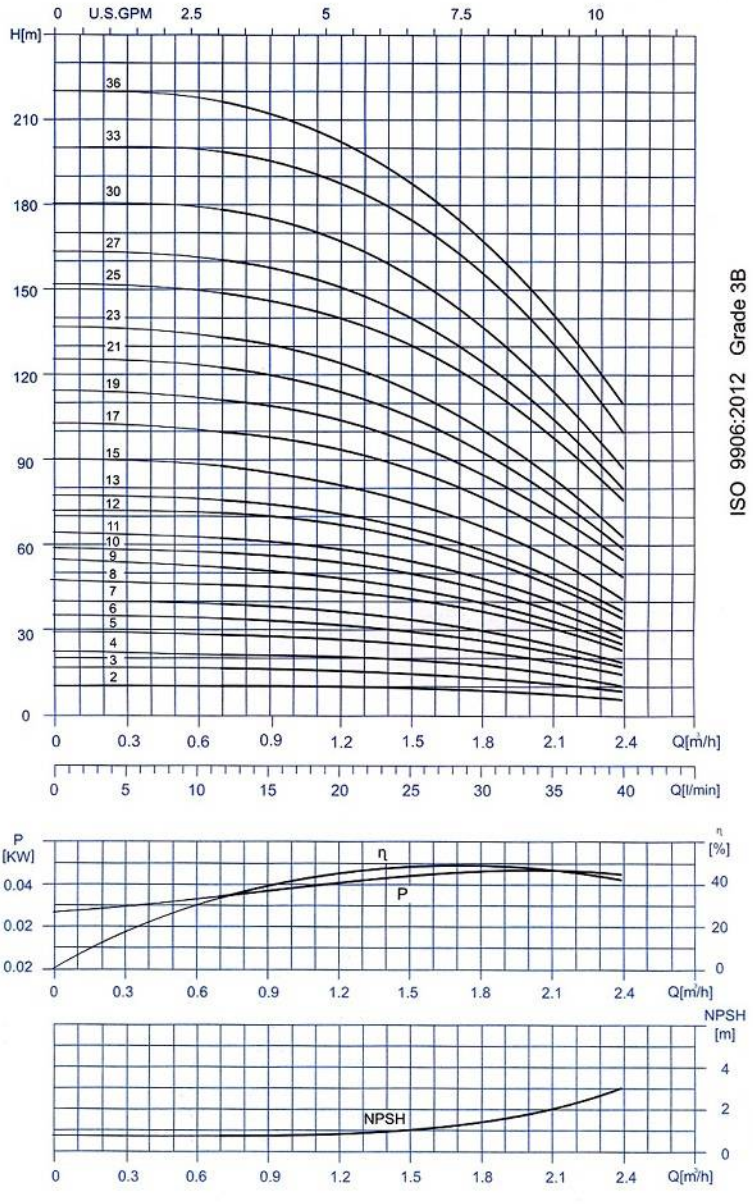

Vertical Multistage Centrifugal in - line Pump

Dimensions and weights - PCR 1

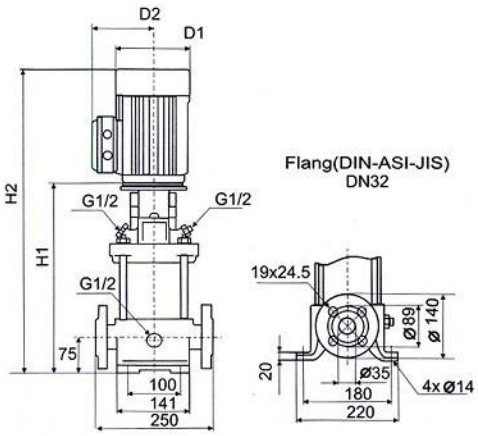

General Specification

Output size:	25 to 125 mm
Capacity:	0.7-180 m3/hr
Head:	275 m
Operation Temperature:	-15 to +120
Main Connection (1~[v/Hz]):	220-240 V, 50 Hz
Main Connection (3~[v/Hz]):	380-415 V, 50 Hz
Insulation Class:	F
Enclosure Class:	IP 55
Ambient Temperature:	50°c

Pump type	Motor		PCR					
			Pump Flanges (mm)	Dimension(mm)				Net weight (kg)
	P	rpm		DIN flange		D1	D2	
	[KW]			H1	H2			DIN flange
PCR 1-2	0.37	2900	32	279	474	141	115	23.4
PCR 1-3	0.37			279	474	141	115	23.4
PCR 1-4	0.37			297	492	141	115	23.8
PCR 1-5	0.37			333	528	141	115	24.2
PCR 1-6	0.37			315	510	141	115	24.5
PCR 1-7	0.37			351	546	141	115	24.9
PCR 1-8	0.55			369	564	141	115	25.8
PCR 1-9	0.55			387	582	141	115	26.1
PCR 1-10	0.55			405	600	141	115	26.5
PCR 1-11	0.55			423	618	141	115	26.9
PCR 1-12	0.75			447	682	141	115	29.4
PCR 1-13	0.75			465	700	141	115	29.8
PCR 1-15	0.75			501	736	141	115	30.5
PCR 1-17	1.1			537	772	141	115	32.3
PCR 1-19	1.1			573	808	141	115	33.1
PCR 1-21	1.1			609	844	141	115	33.8
PCR 1-23	1.1			645	880	141	115	34.6
PCR 1-25	1.5			697	988	177	141	44.0
PCR 1-27	1.5			733	1024	177	141	44.8
PCR 1-30	1.5			787	1078	177	141	45.9
PCR 1-33	2.2			841	1132	177	141	49.9
PCR 1-36	2.2			895	1186	177	141	51.0

Vertical Multistage Centrifugal in - line Pump PCR 3

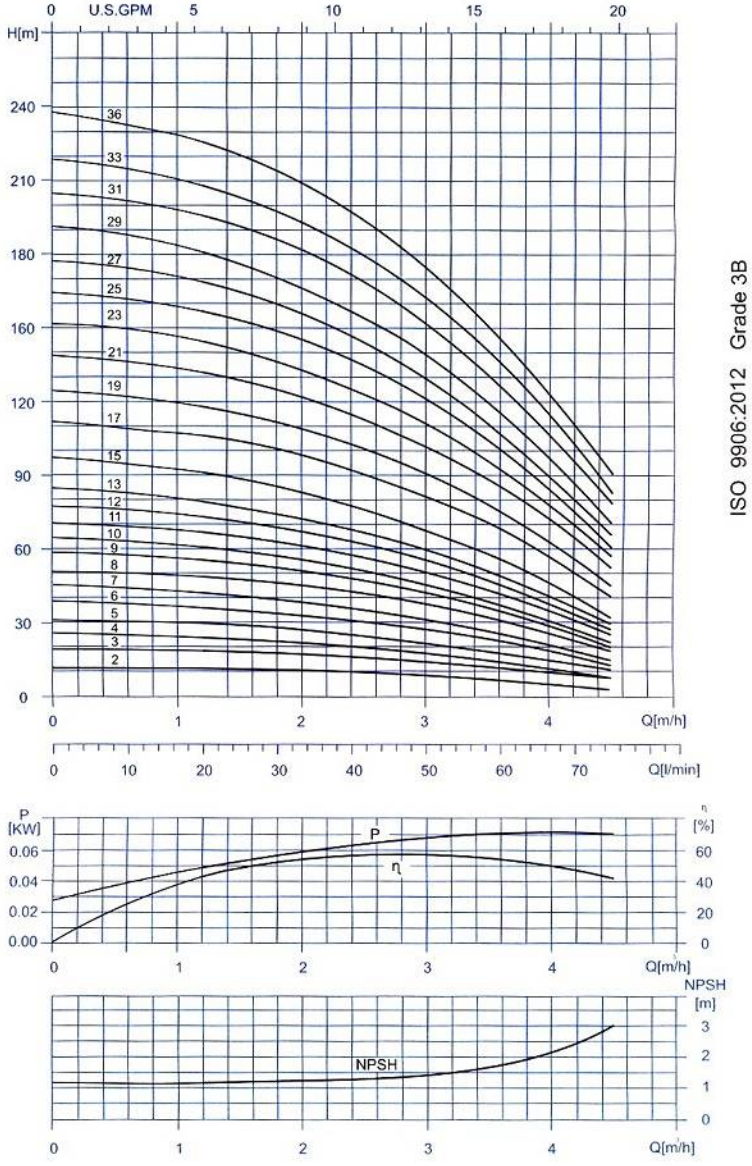

ISO 9906:2012 Grade 3B

Dimensions and weights - PCR 3

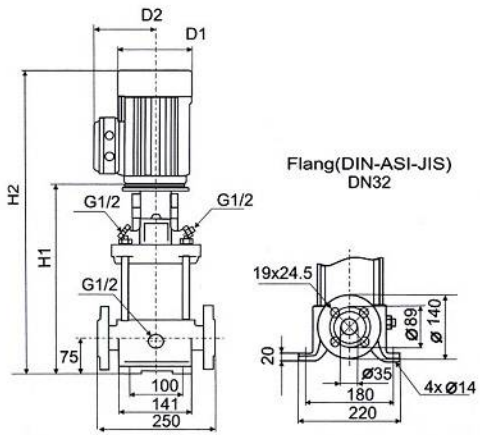

General Specification

Output size:	25 to 125 mm
Capacity:	0.7-180 m3/hr
Head:	275 m
Operation Temperature:	-15 to +120
Main Connection (1~[v/Hz]):	220-240 V, 50 Hz
Main Connection (3~[v/Hz]):	380-415 V, 50 Hz
Insulation Class:	F
Enclosure Class:	IP 55
Ambient Temperature:	50°c

Pump type	Motor		PCR					
	P	rpm	Pump Flanges (mm)	Dimension(mm) DIN flange H1	Dimension(mm) DIN flange H2	D1	D2	Net weight (kg) DIN flange
	[KW]							
PCR 3 - 2	0.37	2900	32	279	474	141	115	23.4
PCR 3 - 3	0.37			279	474	141	115	23.4
PCR 3 - 4	0.37			297	492	141	115	23.8
PCR 3 - 5	0.37			315	510	141	115	24.2
PCR 3 - 6	0.55			333	528	141	115	25.0
PCR 3 - 7	0.55			351	546	141	115	25.4
PCR 3 - 8	0.75			375	610	141	115	27.9
PCR 3 - 9	0.75			393	628	141	115	28.3
PCR 3 - 10	0.75			411	646	141	115	28.7
PCR 3 - 11	1.1			429	664	141	115	30.2
PCR 3 - 12	1.1			447	682	141	115	3.5
PCR 3 - 13	1.1			465	700	141	115	30.9
PCR 3 - 15	1.1			501	736	141	141	31.6
PCR 3 - 17	1.5			553	844	177	141	41.0
PCR 3 - 19	1.5			589	880	177	141	41.8
PCR 3 - 21	2.2			625	916	177	141	45.3
PCR 3 - 23	2.2			661	952	177	141	46.1
PCR 3 - 25	2.2			697	988	177	141	46.8
PCR 3 - 27	2.2			733	1024	177	141	47.6
PCR 3 - 29	2.2			769	1060	177	141	48.3
PCR 3 - 31	3			809	1125	197	147	56.6
PCR 3 - 33	3			845	1161	197	147	57.4
PCR 3 - 36	3			899	1215	197	147	58.5

Vertical Multistage Centrifugal in - line Pump PCR 5

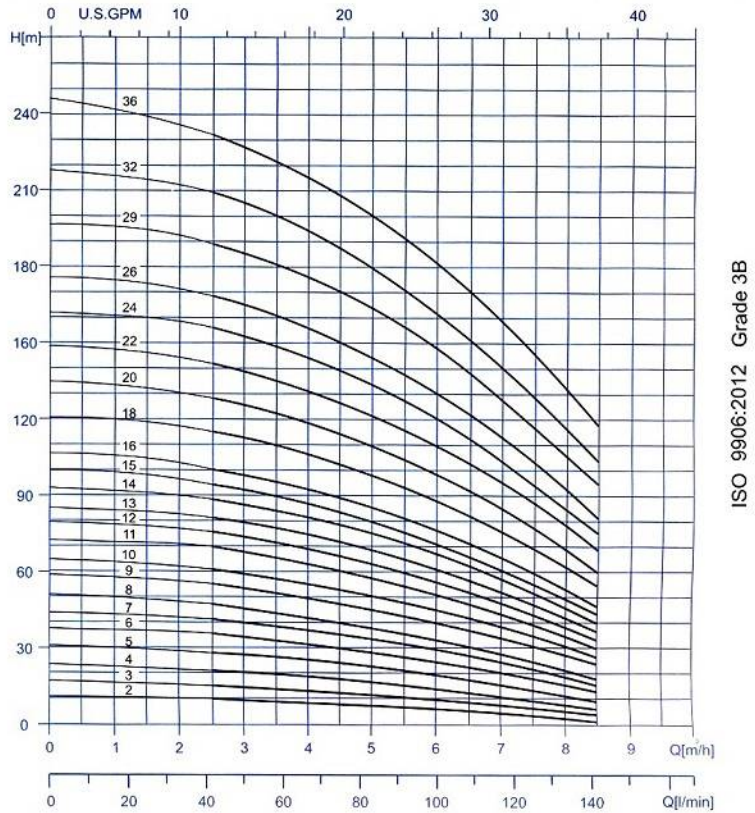

ISO 9906:2012 Grade 3B

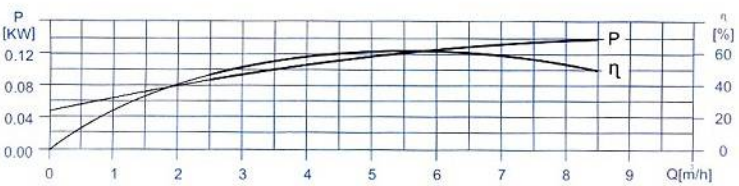

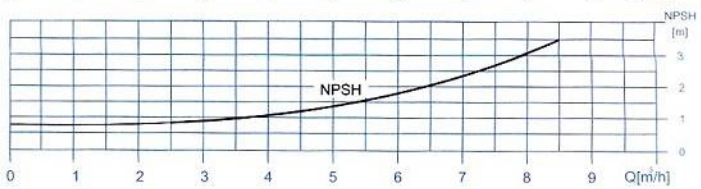

Dimensions and weights - PCR 5

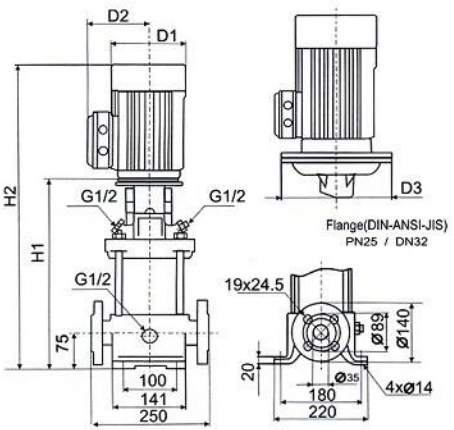

General Specification

Output size:	25 to 125 mm
Capacity:	0.7-180 m3/hr
Head:	275 m
Operation Temperature:	-15 to +120
Main Connection (1~[v/Hz]):	220-240 V, 50 Hz
Main Connection (3~[v/Hz]):	380-415 V, 50 Hz
Insulation Class:	F
Enclosure Class:	IP 55
Ambient Temperature:	50°c

Pump type	Motor		PCR						
			Pump Flanges (mm)	Dimension(mm)					Net weight (kg)
	P	rpm		DIN flange		D1	D2	D3	
	[KW]			H1	H2				DIN flange
PCR 5-2	0.37	2900	32	279	474	141	115	-	23.3
PCR 5-3	0.55			306	501	141	115	-	24.2
PCR 5-4	0.55			333	528	141	115	-	24.8
PCR 5-5	0.75			366	601	141	115	-	27.4
PCR 5-6	1.1			393	628	141	115	-	29.1
PCR 5-7	1.1			420	655	141	115	-	29.6
PCR 5-8	1.1			447	682	141	115	-	30.1
PCR 5-9	1.5			490	781	177	141	-	39.3
PCR 5-10	1.5			517	808	177	141	-	39.9
PCR 5-11	2.2			544	835	177	141	-	43.2
PCR 5-12	2.2			571	862	177	141	-	43.7
PCR 5-13	2.2			598	889	177	141	-	44.2
PCR 5-14	2.2			625	916	177	141	-	44.8
PCR 5-15	2.2			652	943	177	141	-	45.2
PCR 5-16	2.2			679	970	177	141	-	45.8
PCR 5-18	3			737	1053	197	147	-	54.3
PCR 5-20	3			791	1107	197	147	-	55.5
PCR 5-22	4			845	1171	220	161	-	59.8
PCR 5-24	4			899	1225	220	161	-	60.8
PCR 5-26	4			953	1279	220	161	-	62.7
PCR 5-29	4			1034	1360	220	161	-	64.6
PCR 5-32	5.5			1145	1507	235	197	300	90.1
PCR 5-36	5.5			1253	1615	235	197	300	92.6

Vertical Multistage Centrifugal in - line Pump PCR 10

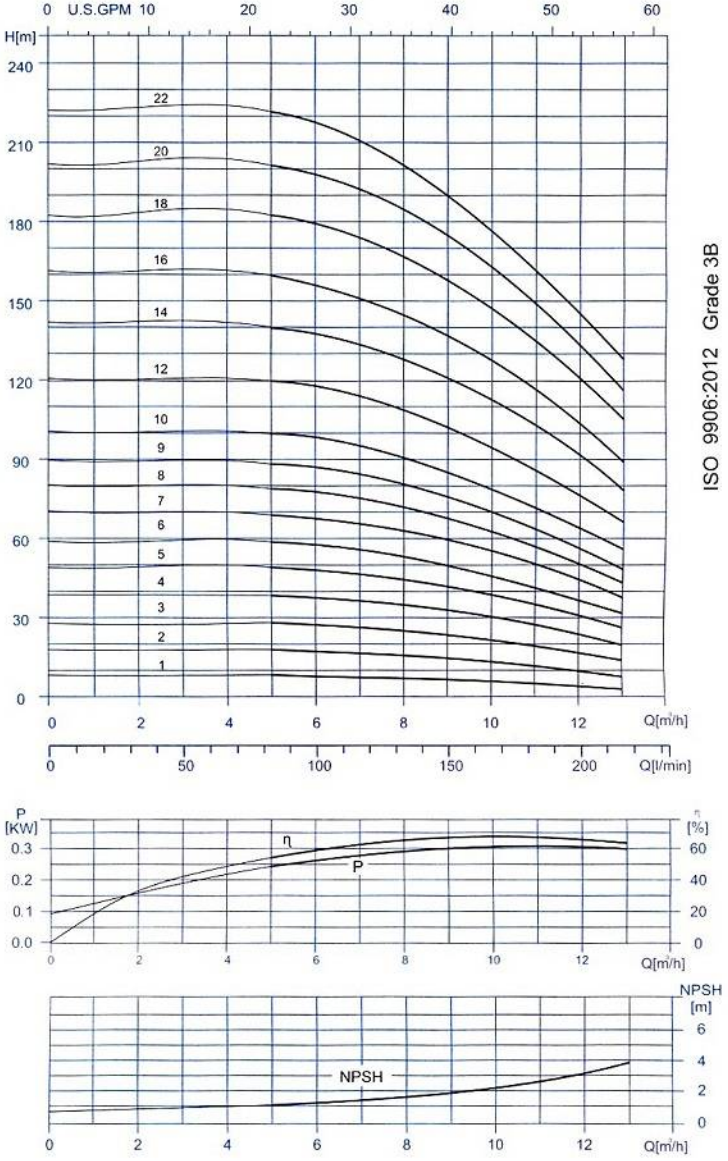

Dimensions and weights - PCR 10

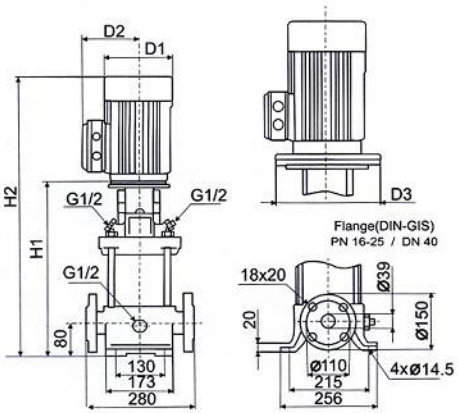

General Specification

Output size:	25 to 125 mm
Capacity:	0.7-180 m3/hr
Head:	275 m
Operation Temperature:	-15 to +120
Main Connection (1~[v/Hz]):	220-240 V, 50 Hz
Main Connection (3~[v/Hz]):	380-415 V, 50 Hz
Insulation Class:	F
Enclosure Class:	IP 55
Ambient Temperature:	50°c

Pump type	Motor		PCR						
			Pump Flanges (mm)	Dimension(mm)					Net weight (kg)
	P	rpm		DIN flange		D1	D2	D3	
	[KW]			H1	H2				DIN flange
PCR 10-1	0.37	2900	40	343	538	141	115		35.9
PCR 10-2	0.75			347	582	141	115	-	38.2
PCR 10-3	1.1			377	612	141	115	-	40.3
PCR 10-4	1.5			423	714	177	141	-	50.1
PCR 10-5	2.2			453	744	177	141	-	53.9
PCR 10-6	2.2			483	774	177	141	-	55.0
PCR 10-7	3			518	834	197	147	-	63.8
PCR 10-8	3			548	864	197	147	-	64.9
PCR 10-9	3			578	894	197	147	-	65.9
PCR 10-10	4			608	934	220	161	-	70.3
PCR 10-12	4			668	994	220	161	-	72.4
PCR 10-14	5.5			760	1122	235	197	300	104.1
PCR 10-16	5.5			820	1182	235	197	300	106.2
PCR 10-18	7.5			880	1278	235	197	300	113.6
PCR 10-20	7.5			940	1338	235	197	300	116.7
PCR 10-22	7.5			1000	1398	235	197	300	118.8

Vertical Multistage Centrifugal in - line Pump PCR 15

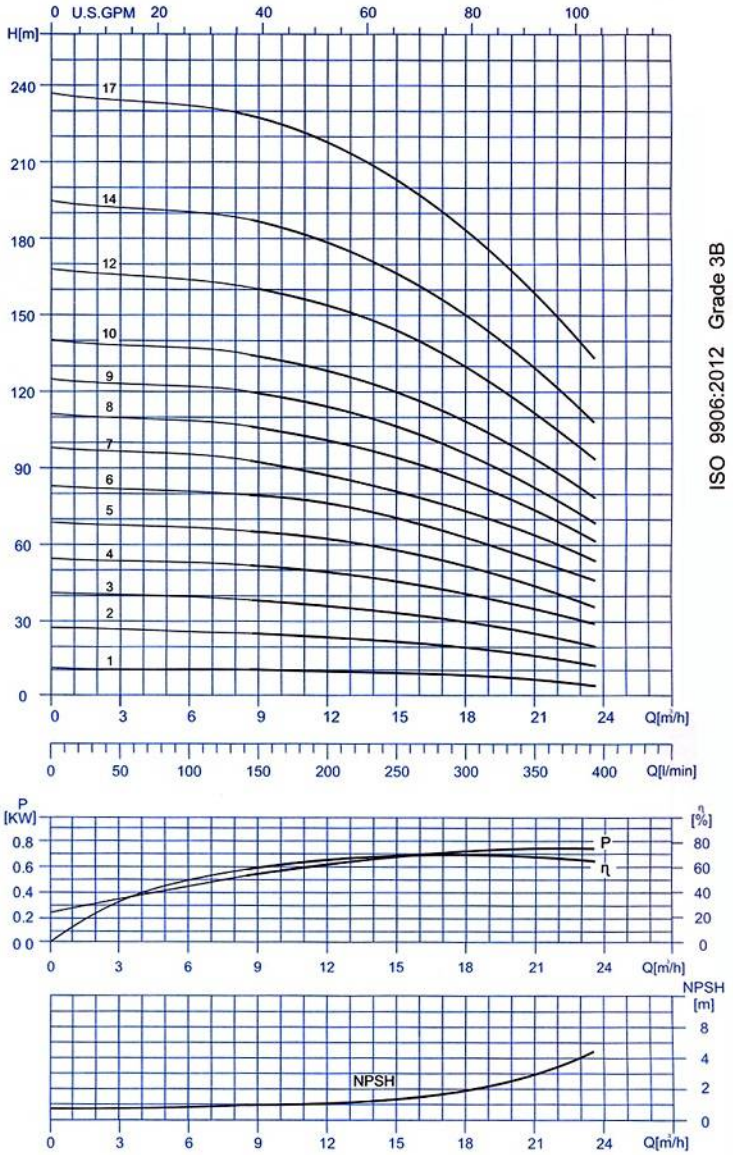

ISO 9906:2012 Grade 3B

GIL Tajhiz Tahvieh Company / Rasht - Iran
WWW.GILTAJHIZ.ir _ Tel: +98911 431 0051

Dimensions and weights - PCR 15

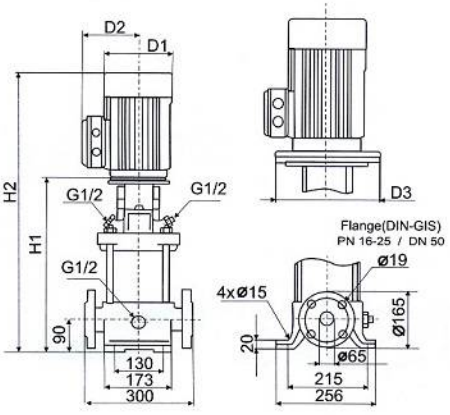

General Specification

Output size:	25 to 125 mm
Capacity:	0.7-180 m3/hr
Head:	275 m
Operation Temperature:	-15 to +120
Main Connection (1~[v/Hz]):	220-240 V, 50 Hz
Main Connection (3~[v/Hz]):	380-415 V, 50 Hz
Insulation Class:	F
Enclosure Class:	IP 55
Ambient Temperature:	50°c

Pump type	Motor		PCR						
	P	rpm	Pump Flanges (mm)	Dimension(mm)					Net weight (kg)
				DIN flange		D1	D2	D3	
	[KW]			H1	H2				DIN flange
PCR 15-1	1.1	2900	50	400	635	141	115		43.8
PCR 15-2	2.2			415	706	177	141	-	55.7
PCR 15-3	3			465	781	197	147	-	64.9
PCR 15-4	4			510	836	220	161	-	69.7
PCR 15-5	4			555	881	220	161	-	71.2
PCR 15-6	5.5			632	994	235	197	300	102.3
PCR 15-7	5.5			677	1039	235	197	300	103.8
PCR 15-8	7.5			722	1120	235	197	300	111.8
PCR 15-9	7.5			767	1165	235	197	300	113.3
PCR 15-10	11			889	1394	318	154	300	150.0
PCR 15-12	11			979	1484	318	154	300	153.0
PCR 15-14	11			1069	1574	318	154	300	156.3
PCR 15-17	15			1204	1714	318	154	300	171.5

Vertical Multistage Centrifugal in - line Pump PCR 20

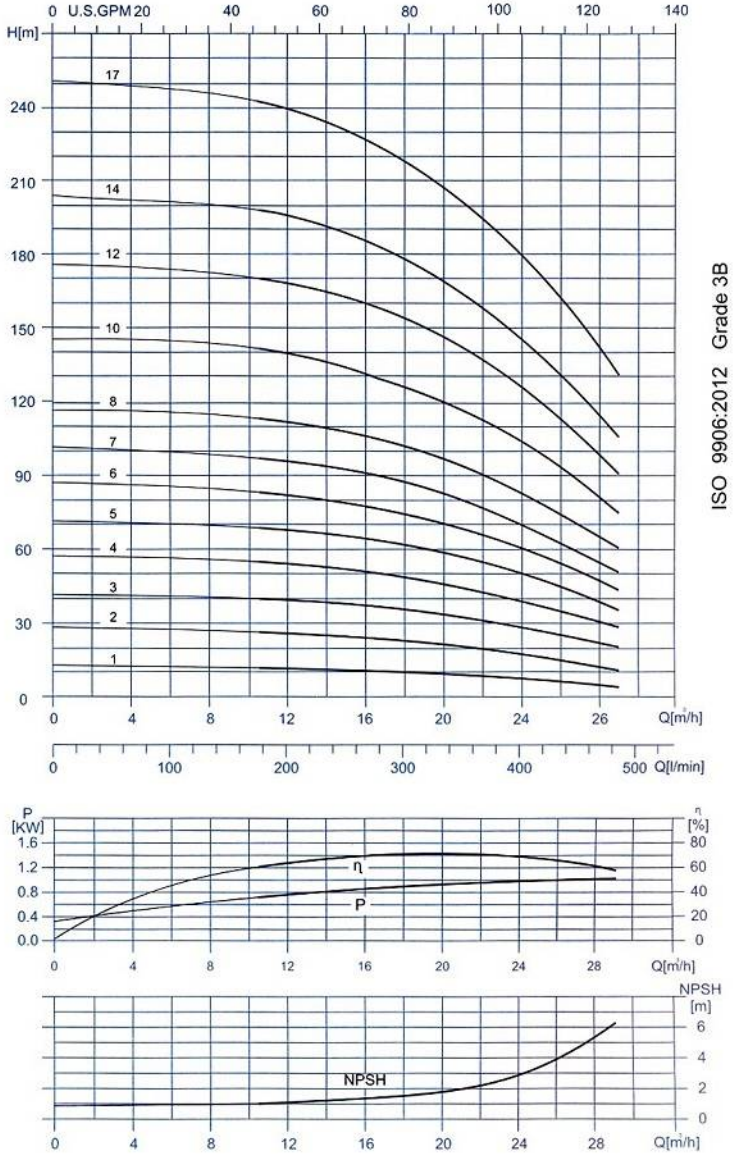

Dimensions and weights - PCR 20

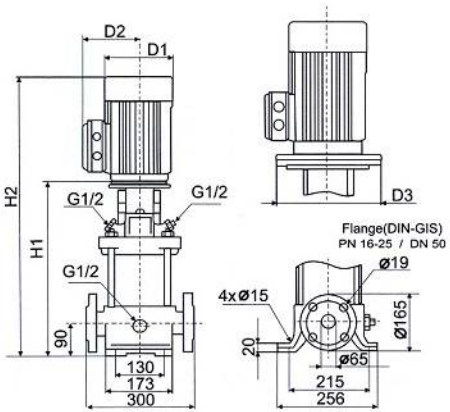

General Specification

Output size:	25 to 125 mm
Capacity:	0.7-180 m3/hr
Head:	275 m
Operation Temperature:	-15 to +120
Main Connection (1~[v/Hz]):	220-240 V, 50 Hz
Main Connection (3~[v/Hz]):	380-415 V, 50 Hz
Insulation Class:	F
Enclosure Class:	IP 55
Ambient Temperature:	50°c

Pump type	Motor		PCR					
			Pump Flanges (mm)	Dimension(mm)				Net weight (kg)
	P	rpm		DIN flange		D1	D2	D3	DIN flange
	[KW]			H1	H2				
PCR 20-1	1.1	2900	50	400	636	141	115	-	43.9
PCR 20-2	2.2			415	708	177	141	-	55.7
PCR 20-3	4			465	795	220	161	-	68.3
PCR 20-4	5.5			542	910	235	197	300	99.4
PCR 20-5	5.5			587	955	235	197	300	100.8
PCR 20-6	7.5			632	1038	235	197	300	108.6
PCR 20-7	7.5			677	1083	235	197	300	110.1
PCR 20-8	11			799	1315	318	245	350	147.1
PCR 20-10	11			889	1405	318	245	350	150.0
PCR 20-12	15			979	1504	318	245	350	163.1
PCR 20-14	15			1069	1594	318	245	350	166.0
PCR 20-17	18.5			1204	1773	318	245	350	195.4

Vertical Multistage Centrifugal in - line Pump PCR 32

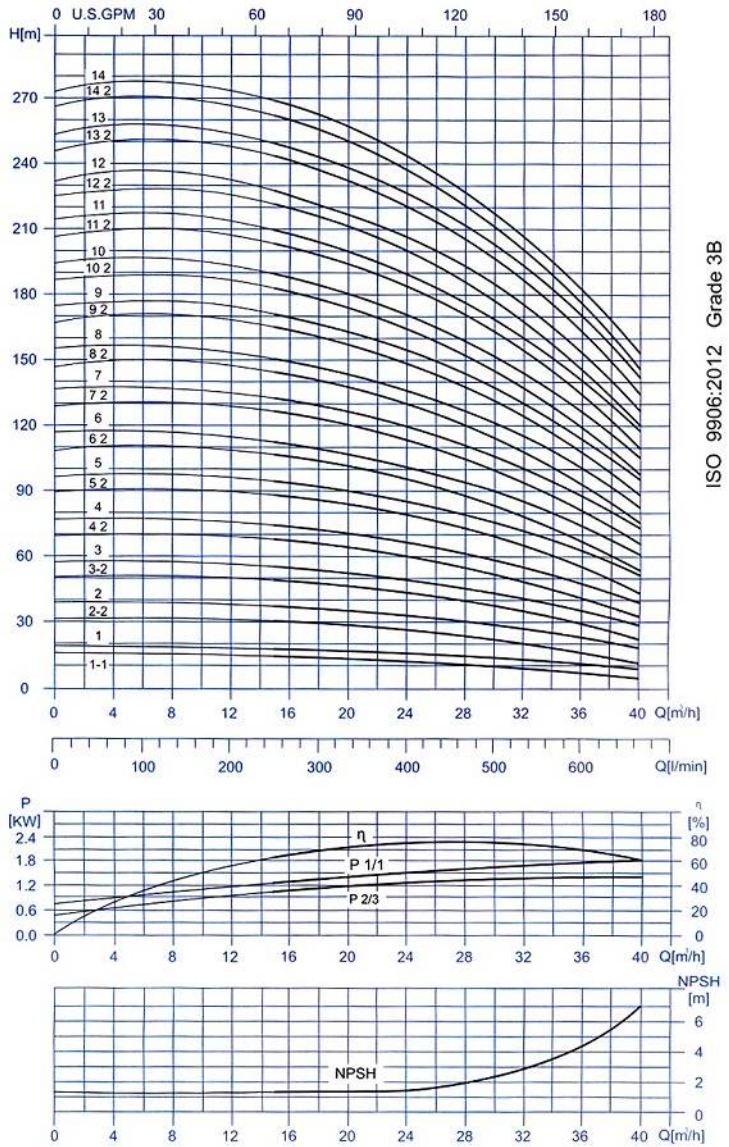

Vertical Multistage Centrifugal in - line Pump

Dimensions and weights - PCR 32

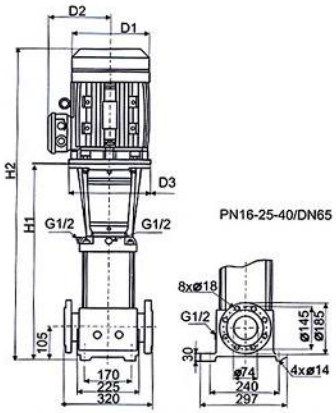

General Specification

Output size:	25 to 125 mm
Capacity:	0.7-180 m3/hr
Head:	275 m
Operation Temperature:	-15 to +120
Main Connection (1~[v/Hz]):	220-240 V, 50 Hz
Main Connection (3~[v/Hz]):	380-415 V, 50 Hz
Insulation Class:	F
Enclosure Class:	IP 55
Ambient Temperature:	50°c

Pump type	Motor		PCR						
			Pump Flanges (mm)	Dimension(mm)					Net weight (kg)
	P	rpm		DIN flange		D1	D2	D3	
	[KW]			H1	H2				DIN flange
PCR 32-1-1	1.5	2900	65	504	79	177	141	280	71.5
PCR 32-1	2.2			504	795	177	141	280	74.3
PCR 32-2-2	3			574	935	197	147	280	84.2
PCR 32-2	4			574	900	220	161	280	87.6
PCR 32-3-2	5.5			644	1006	235	197	300	110.2
PCR 32-3	5.5			644	1006	235	197	300	110.2
PCR 32-4-2	7.5			714	1112	235	197	300	119.5
PCR 32-4	7.5			714	1112	235	197	300	119.5
PCR 32-5-2	11			894	1399	318	245	350	163.3
PCR 32-5	11			894	1399	318	245	350	163.3
PCR 32-6-2	11			964	1469	318	245	350	166.3
PCR 32-6	11			964	1469	318	245	350	166.3
PCR 32-7-2	15			1034	1544	318	245	350	179.5
PCR 32-7	15			1034	1544	318	245	350	179.5
PCR 32-8-2	15			1104	1614	318	245	350	182.6
PCR 32-8	15			1104	1614	318	245	350	182.6
PCR 32-9-2	18.5			1174	1794	318	245	350	210.6
PCR 32-9	18.5			1174	1794	318	245	350	210.6
PCR 32-10-2	18.5			1244	1794	318	245	350	212.7
PCR 32-10	18.5			1244	1794	318	245	350	213.7
PCR 32-11-2	22			1314	1894	358	265	350	258.8
PCR 32-11	22			1314	1894	358	265	350	258.8
PCR 32-12-2	22			1384	1964	358	265	350	260.8
PCR 32-12	22			1384	1964	358	265	350	260.8
PCR 32-13-2	30			1454	2114	420	295	400	328.2
PCR 32-13	30			1454	2114	420	295	400	328.2
PCR 32-14-2	30			1524	2184	420	295	400	331.3
PCR 32-14	30			1524	2184	420	295	400	331.3

GIL Tajhiz Tahvieh Company / Rasht - Iran
WWW.GILTAJHIZ.ir _ Tel: +98911 431 0051

Vertical Multistage Centrifugal in - line Pump PCR 45

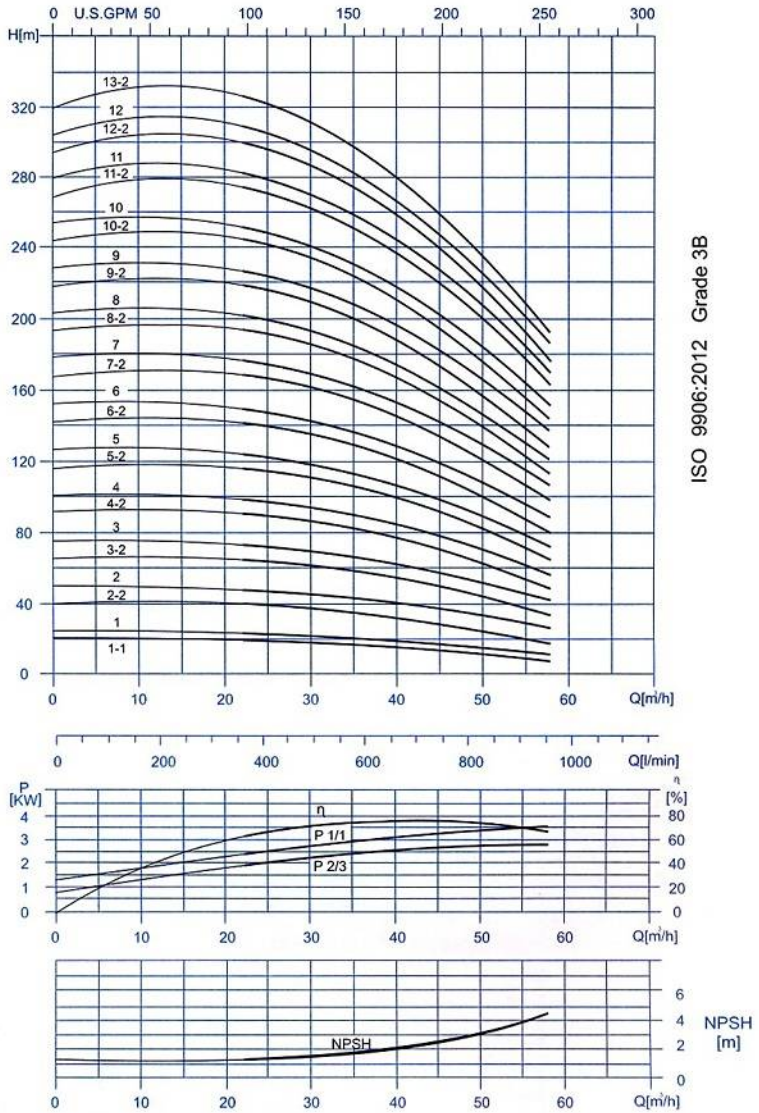

Vertical Multistage Centrifugal in - line Pump

Dimensions and weights - PCR 45

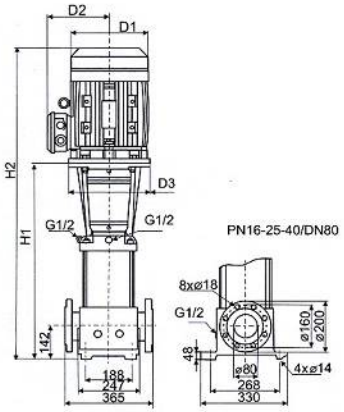

General Specification

Output size:	25 to 125 mm
Capacity:	0.7-180 m3/hr
Head:	275 m
Operation Temperature:	-15 to +120
Main Connection (1~[v/Hz]):	220-240 V, 50 Hz
Main Connection (3~[v/Hz]):	380-415 V, 50 Hz
Insulation Class:	F
Enclosure Class:	IP 55
Ambient Temperature:	50°c

Pump type	Motor		PCR						
			Pump Flanges (mm)	Dimension(mm)				Net weight (kg)	
	P	rpm		DIN flange		D1	D2	D3	
	[KW]			H1	H2				DIN flange
PCR 45-1-1	3	2900	80	561	877	197	147	280	91.7
PCR 45-1	4			561	887	220	161	280	95.1
PCR 45-2-2	5.5			641	1003	235	197	300	118.3
PCR 45-2	7.5			641	1039	235	197	300	124.6
PCR 45-3-2	11			831	1336	318	197	350	169.0
PCR 45-3	11			831	1336	318	245	350	169.0
PCR 45-4-2	15			911	1421	318	245	350	182.9
PCR 45-4	15			911	1421	318	245	350	182.9
PCR 45-5-2	18.5			991	1541	318	245	350	211.6
PCR 45-5	18.5			991	1541	318	245	350	211.6
PCR 45-6-2	22			1071	1651	358	245	350	258.1
PCR 45-6	22			1071	1651	358	265	350	258.1
PCR 45-7-2	30			1151	1811	420	295	400	326.4
PCR 45-7	30			1151	1811	420	295	400	326.5
PCR 45-8-2	30			1231	1891	420	295	400	330.2
PCR 45-8	30			1231	1891	420	295	400	331.3
PCR 45-9-2	30			1311	1971	420	295	400	334.0
PCR 45-9	37			1311	1971	420	295	400	3470
PCR 45-10-2	37			1391	2051	420	295	400	350.7
PCR 45-10	37			1391	2051	420	295	400	350.7
PCR 45-11-2	45			1471	2161	470	325	450	412.5
PCR 45-11	45			1471	2161	470	325	450	412.5
PCR 45-12-2	45			1551	2241	470	325	450	416.2
PCR 45-12	45			1551	2241	470	325	450	416.2
PCR 45-13-2	45			1631	2321	470	325	450	419.9

Vertical Multistage Centrifugal in - line Pump PCR 64

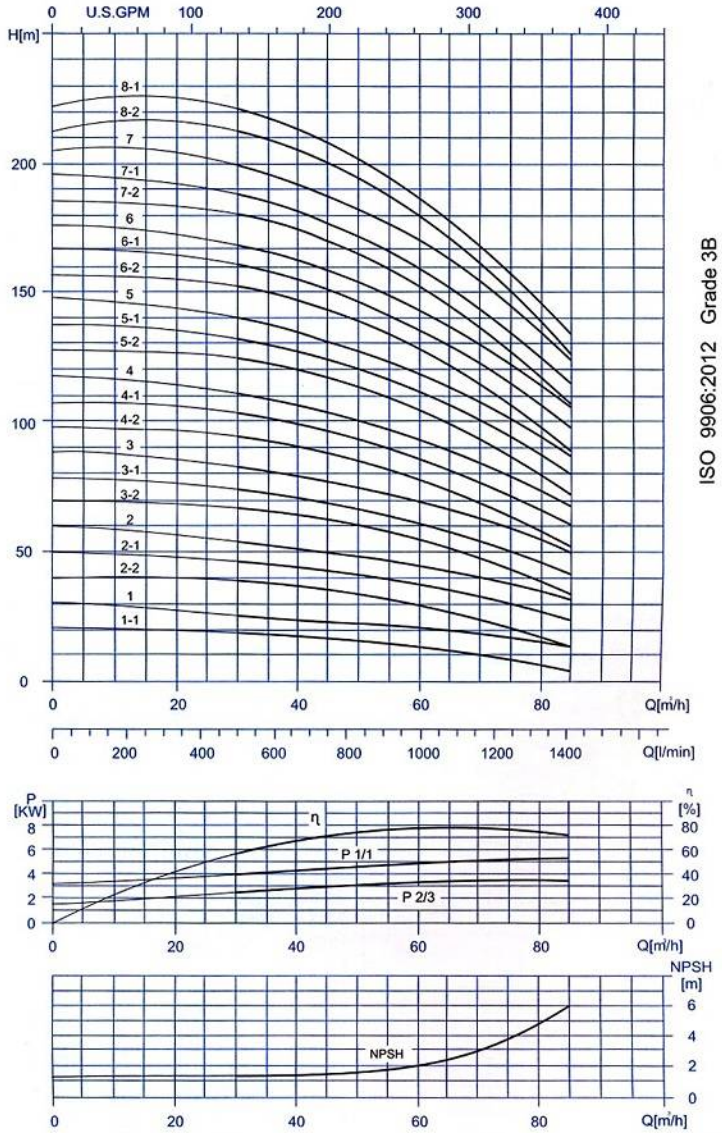

Dimensions and weights - PCR 64

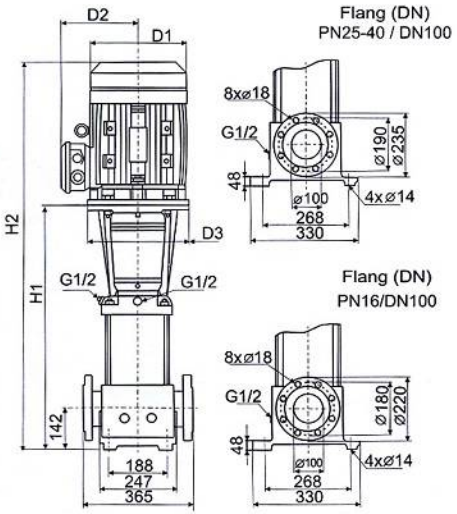

General Specification

Output size:	25 to 125 mm
Capacity:	0.7-180 m3/hr
Head:	275 m
Operation Temperature:	-15 to +120
Main Connection (1~[v/Hz]):	220-240 V, 50 Hz
Main Connection (3~[v/Hz]):	380-415 V, 50 Hz
Insulation Class:	F
Enclosure Class:	IP 55
Ambient Temperature:	50°c

Pump type	Motor		PCR						
			Pump Flanges (mm)	Dimension(mm)					Net weight (kg)
	P	rpm		DIN flange		D1	D2	D3	
	[KW]			H1	H2				DIN flange
PCR 64-1-1	4	2900	100	563	889	220	161	280	88.9
PCR 64-1	5.5			563	613	235	197	300	108.3
PCR 64-2-2	7.5			646	702	235	197	300	118.7
PCR 64-2-1	11			756	1261	318	245	350	159.3
PCR 64-2	11			756	1261	318	245	350	159.3
PCR 64-3-2	15			838	1348	318	245	350	174.0
PCR 64-3-1	15			838	1348	318	245	350	174.0
PCR 64-3	18.5			838	1388	318	245	350	198.9
PCR 64-4-2	18.5			921	1471	318	245	350	202.9
PCR 64-4-1	22			921	1501	358	265	350	245.7
PCR 64-4	22			921	1501	358	265	350	245.7
PCR 64-5-2	30			1003	1663	420	295	400	314.3
PCR 64-5-1	30			1003	1663	420	295	400	314.3
PCR 64-5	30			1003	1663	420	295	400	314.3
PCR 64-6-2	30			1086	1746	420	295	400	318.2
PCR 64-6-1	37			1086	1746	420	295	400	331.2
PCR 64-6	37			1086	1746	420	295	400	331.2
PCR 64-7-2	37			1168	1828	420	295	400	335.3
PCR 64-7-1	37			1168	1828	420	295	400	335.3
PCR 64-7	45			1172	1862	470	325	450	393.4
PCR 64-8-2	45			1255	1945	470	325	450	397.5
PCR 64-8-1	45			1255	1945	470	325	450	397.5

Vertical Multistage Centrifugal in - line Pump PCR 90

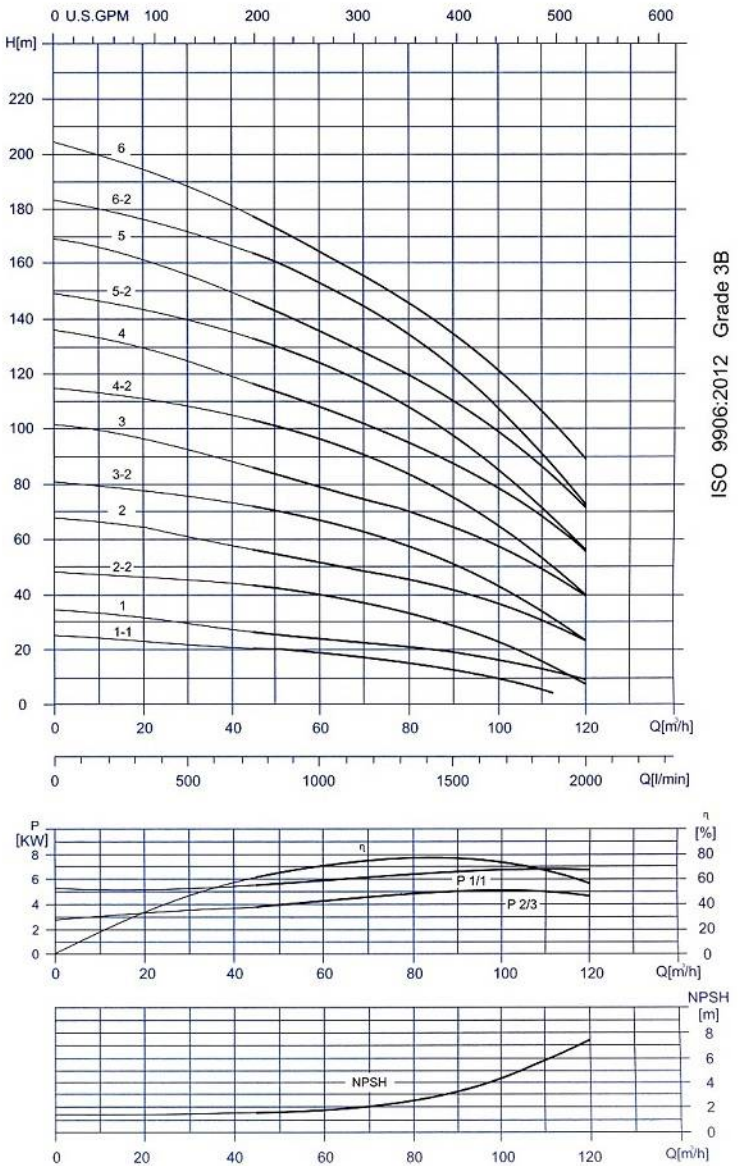

GIL Tajhiz Tahvieh Company / Rasht - Iran
WWW.GILTAJHIZ.ir _ Tel: +98911 431 0051 _

Dimensions and weights - PCR 90

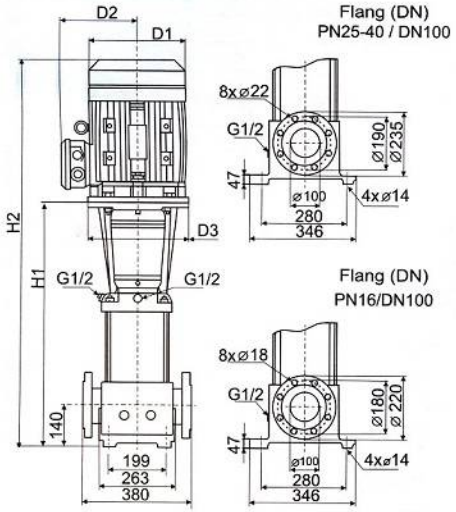

General Specification

Output size:	25 to 125 mm
Capacity:	0.7-180 m3/hr
Head:	275 m
Operation Temperature:	-15 to +120
Main Connection (1~[v/Hz]):	220-240 V, 50 Hz
Main Connection (3~[v/Hz]):	380-415 V, 50 Hz
Insulation Class:	F
Enclosure Class:	IP 55
Ambient Temperature:	50°c

Pump type	Motor		PCR						
	P	rpm	Pump Flanges (mm)	Dimension(mm)					Net weight (kg)
	[KW]			DIN flange		D1	D2	D3	DIN flange
				H1	H2				
PCR 90-1-1	5.5	2900	100	572	934	235	197	300	122.2
PCR 90-1	7.5			572	970	235	197	300	128.5
PCR 90-2-2	11			774	1279	318	245	350	174.5
PCR 90-2	15			774	1284	318	245	350	184.5
PCR 90-3-2	18.5			866	1416	318	245	350	214.7
PCR 90-3	22			866	1446	358	265	350	257.5
PCR 90-4-2	30			958	1618	420	295	400	327.3
PCR 90-4	30			958	1618	420	295	400	327.3
PCR 90-5-2	37			1050	1710	420	295	400	346.9
PCR 90-5	37			1050	1710	420	295	400	346.9
PCR 90-6-2	45			1142	1832	470	325	450	410.2
PCR 90-6	45			1142	1832	470	325	450	410.3

Vertical Multistage Centrifugal in - line Pump PCR 120

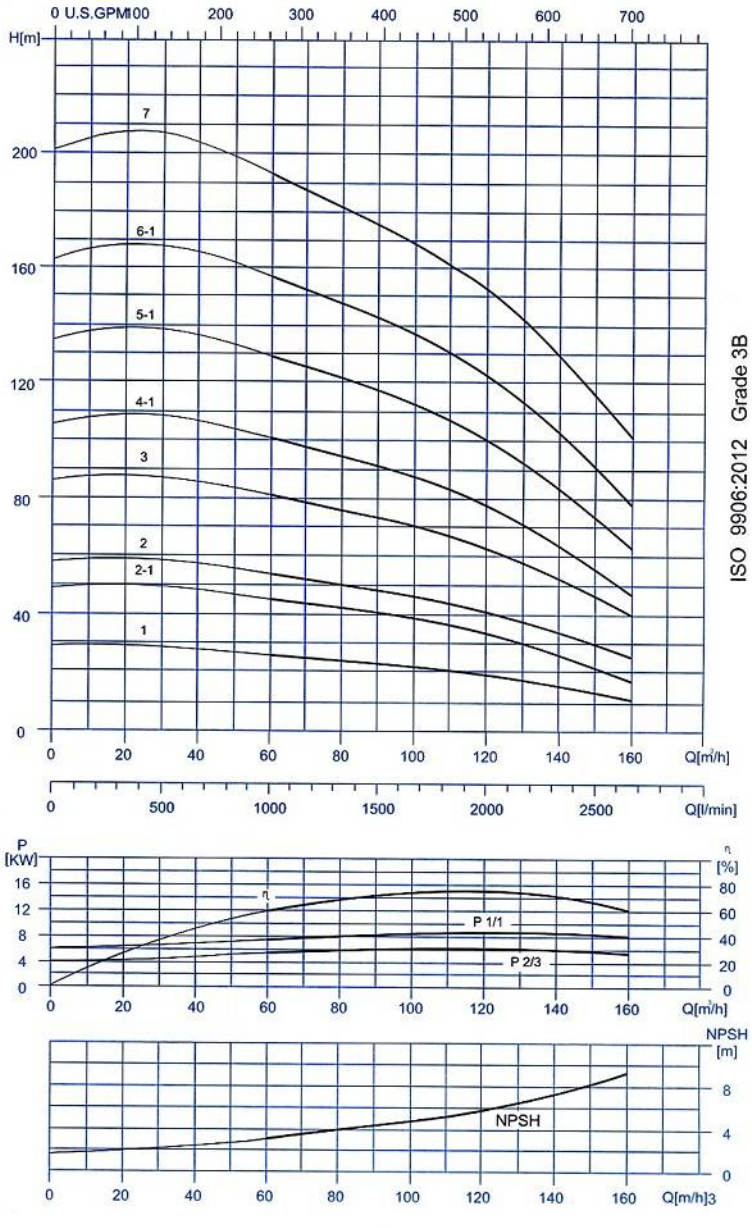

GIL Tajhiz Tahvieh Company / Rasht - Iran
WWW.GILTAJHIZ.ir _ Tel: +98911 431 0051 _

Dimensions and weights - PCR 120

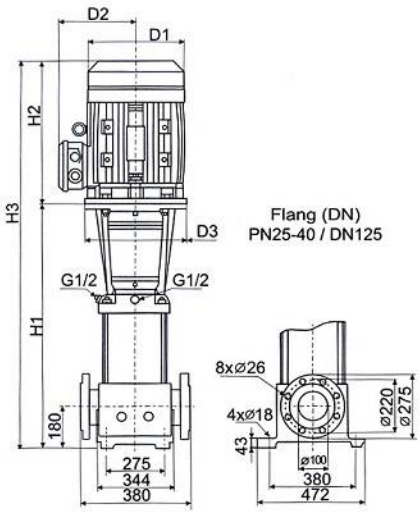

General Specification

Output size:	25 to 125 mm
Capacity:	0.7-180 m3/hr
Head:	275 m
Operation Temperature:	-15 to +120
Main Connection (1~[v/Hz]):	220-240 V, 50 Hz
Main Connection (3~[v/Hz]):	380-415 V, 50 Hz
Insulation Class:	F
Enclosure Class:	IP 55
Ambient Temperature:	50°c

Pump type	Motor		PCR							
	P	rpm	Pump Flanges (mm)	Dimension(mm)						Net weight (kg)
				DIN flange			D1	D2	D3	
	[KW]			H1	H2	H3				DIN flange
PCR 120-1-1	11	2900	125	834	505	1339	318	245	350	200.1
PCR 120-2-1	18.5			990	550	1540	318	245	350	245.1
PCR 120-2	22			990	580	1570	358	265	350	291.8
PCR 120-3	30			1145	660	1805	420	295	400	362.5
PCR 120-4-1	37			1301	660	1961	420	295	400	385.5
PCR 120-5-1	45			1460	690	2150	470	325	450	453.6
PCR 120-6-1	55			1642	770	2412	510	355	550	578.8
PCR 120-7	75			1797	845	2642	580	410	550	751.4

Vertical Multistage Centrifugal in - line Pump PCR 150

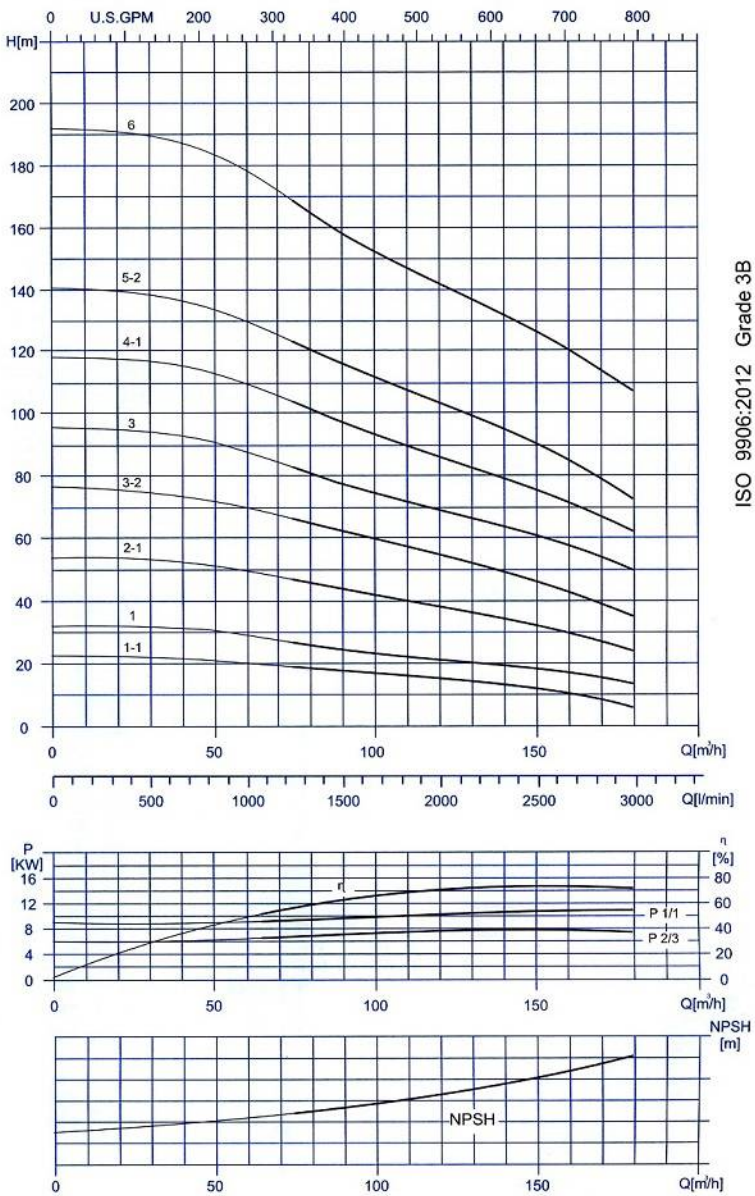

GIL Tajhiz Tahvieh Company / Rasht - Iran
WWW.GILTAJHIZ.ir _ Tel: +98911 431 0051 _

Dimensions and weights - PCR 150

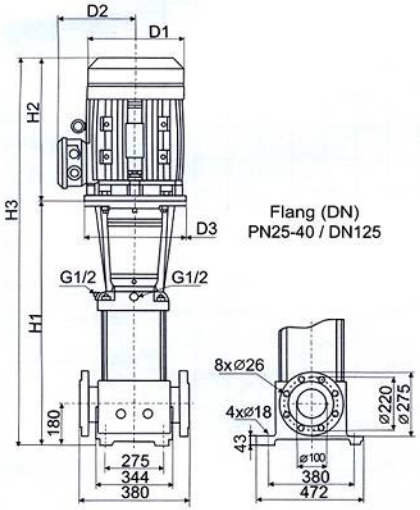

General Specification

Output size:	25 to 125 mm
Capacity:	0.7-180 m3/hr
Head:	275 m
Operation Temperature:	-15 to +120
Main Connection (1~[v/Hz]):	220-240 V, 50 Hz
Main Connection (3~[v/Hz]):	380-415 V, 50 Hz
Insulation Class:	F
Enclosure Class:	IP 55
Ambient Temperature:	50°c

Pump type	Motor		PCR						
				Dimension(mm)					Net weight (kg)
	P	rpm	Pump Flanges (mm)	DIN flange			D1	D2	D3	DIN flange
	[KW]			H1	H2	H3				
PCR 150-1-1	11	2900	125	834	505	1339	318	245	350	200.0
PCR 150-1	15			834	510	1344	318	245	350	210.1
PCR 150-2-1	22			990	580	1570	358	265	350	287.8
PCR 150-3-2	30			1145	660	1805	420	295	400	362.3
PCR 150-3	37			1145	660	1805	420	295	400	375.4
PCR 150-4-1	45			1305	690	1995	470	325	450	443.4
PCR 150-5-2	55			1486	770	2256	510	355	550	568.7
PCR 150-6	75			1642	845	2487	580	410	550	741.0