DUCTED FAN COIL

AzarNasim
HVAC SYSTEMS

GIL Tajhiz Tahvieh Company / Rasht - Iran
WWW.GILTAJHIZ.ir _ Tel: +98911 431 0051 _ +9813 3325 1250

FEATURES & BENERITS

AZAR NASIM ducted fan-coil units are designed to deliver reliable conditioned air in a wide range of capacities. With delivery rates of 800 to 3000 CFM these units can meet the air conditioning demands of a variety of multi room applications such as apartments, office buildings, hotels and hospitals. For cooling applications, units are Available with capacities ranging from 20 to 100 K Btu/hr. and for heating units with capacities of 60 to 200 K Btu/hr. at standard conditions (80°F DB, 67°F WB) can be utilized . With 3 different models and seven basic, sizes in each model along with the choice of Vertical or horizontal types. The wide selection range offers considerable design versatility.

EASE OF INSTALLATION & MAINTENANCE

Horizontal models can be used in cabinet (Exposed) or furred-in (Concealed) applications. Vertical models are built only in exposed free standing models. The low high dimension associated with the horizontal types facilitates easy installation within double ceilings or concealed locations.

Supply air duct collar simplifies field connection to new or existing supply ductwork. Mounting Brackets on each side of the unit allow swift suspension from the ceiling. All wiring and piping connections are located at accessible locations on the unit. Removable bottom panels permit full width access to the mixing box and blower units. Motor-blower unit can be removed in order to expose the entering face of the coil for cleaning purposes. The following design features are incorporated in the construction of AZAR NASIM ducted Fan-coil units.

CABINET

All cabinets are constructed of 1.25 mm galvanized steel sheet with additional paint coating. Panels are insulated with 10 mm polyethylene insulation panel.

FILTERS

Standard filter is removable 1" aluminum mesh washable filter.

CONDENSATE DRAIN PAN

Condensate drain pan is constructed of heavy gauge galvanized sheet metal with the underside Insulated by 3 mm Polyethylene foam. The condensate drain outlet is 3/4 inch O.D. copper tube, Brazed into the condensate drain pan.

COILS

Coils are constructed of 5/8 inch O.D. copper tubes with waffled and rippled edge aluminum or copper fins mechanically bonded to the tubes. All coils are leak tested under water with 325 Psig air in accordance with ANSI/ASHRAE 15 Safety Code for Mechanical Refrigeration.

The coils for hot water applications are identical to chilled water coils available in 4 or 6 rows. All DX coils are evacuated and backfilled with 5 Psig dry nitrogen prior to shipment. Electrical coils could also be mounted on any unit. They shall be protected against overheating.

FANS

The fans are direct driven, centrifugal, forward curved, double width wheels. (DWDI) Fans of The units have three speeds level adjusting: Low, Medium and High.

MOTORS

Motors are three speeds, 4 poles, single phase-50 cycles- 220 V with external rotor-motor. All motors are equipped with thermal overload protection. Motors are split phase type with a capacitor. They possess four connection wires: one in common and three connection wires for three different speeds. If there is a need for more than three different speeds, an autotransformer can be used. (Transformer or any other device should make no change in the shape of the electrical sinus wave.) The following wiring diagram can be used.

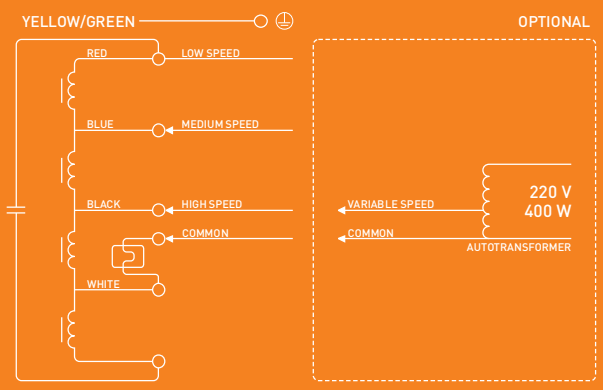

PACKING

Units finally shall be wrapped up with plastic tissue, fastened with polyethylene belts and place don wooden palette, although they should be stored in an indoor storage.

+ All components in AZAR NASIM Ducted Fan-coils are selected of reliable and recognized international brand names or designed and constructed and checked under the standard of the air-conditioning and refrigeration industry.

+ The units are manufactured under Azar Nasim's own Quality Assurance System and also Azar Nasim Standard Engineering Specification (SES).

+ For any special applications please consult Azar Nasim's Sale Office.

Table 1 -PHYSICAL DATA
Physical Data and Sound Ratings

Model	Nominal CFM	Coil					Blower & motor					Sound Ratings (dB) (Sound Pressure Level at 1m)		
		Face area (ft²)		Finned Length (mm)		Tube High	No. ×	Blower Type	Motor (each)					
		Water	DX	Water	DX				(Watt)	RPM	(Ampere*)	Low	Medium	High
DF 800	800	2.05	1.64	500	400	10	1 ×	9/7	350	450~1425	0·85~3·2	56	60	64
DF 1000	1000	2.45	2.05	600	500	10	1 ×	9/9	350	450~1425	0·85~3·2	51	57	60
DF 1200	1200	2.87	2.87	700	700	10	2 ×	9/7	350	450~1425	0·85~3·2	59	63	67
DF 1400	1400	3.27	2.87	800	700	10	2 ×	9/7	350	450~1425	0·85~3·2	59	63	67
DF 1600	1600	3.68	3.28	900	800	10	2 ×	9/7	350	450~1425	0·85~3·2	59	63	67
DF 1800	1800	4.30	3.90	1050	950	10	2 ×	9/9	350	450~1425	0·85~3·2	54	60	63
DF 2000	2000	4.91	4.51	1200	1100	10	2 ×	9/9	350	450~1425	0·85~3·2	54	60	63

* Electrical motor consumption is in the range of 0.85 to 3.2 amps when its rotational speed changes respectively from 450 to 1425 rpm. Any selection should be based on maximum electrical current i.e. 3.2 amp.

Table 2 -UNIT AIR FLOW
CFM with 4 Row Coils

Model	Model	Low		Medium						High	
		External Pressure		External Pressure (inch H20)						External Pres. Drop	
		0.0	0.5	0.0	0.1	0.2	0.3	0.4	0.5	0.0	0.5
DF 800	8 FPI	650	600	1030	1010	990	970	940	910	1300	1150
	14 FPI	630	580	1000	975	955	930	900	870	1250	1050
DF 1000	8 FPI	750	650	1150	1140	1130	1110	1080	1050	1550	1350
	14 FPI	730	630	1130	1120	1100	1070	1040	1000	1450	1250
DF 1200	8 FPI	1260	1120	1880	1825	1775	1725	1670	1580	2200	1850
	14 FPI	1240	1080	1750	1700	1650	1570	1490	1400	2000	1650
DF 1400	8 FPI	1270	1150	1950	1920	1870	1810	1760	1700	2400	2050
	14 FPI	1260	1120	1860	1810	1750	1700	1640	1550	2200	1800
DF 1600	8 FPI	1280	1170	2020	1980	1930	1890	1830	1770	2550	2150
	14 FPI	1270	1150	1940	1890	1840	1790	1730	1680	2350	2000
DF 1800	8 FPI	1450	1260	2280	2240	2200	2160	2090	2020	2900	2500
	14 FPI	1420	1230	2210	2170	2110	2050	1990	1880	2750	2300
DF 2000	8 FPI	1470	1300	2300	2280	2250	2210	2170	2100	3050	2700
	14 FPI	1450	1270	2270	2230	2200	2140	2080	2020	2900	2450

Fans have three speeds level adjusting's: Low, Medium and High.
CFM has been calculated under wet condition of the coil at sea level condition

Cont. Table 2 -UNIT AIR FLOW
CFM with 6 Row Coils

Model	Model	Low		Medium						High	
		External Pressure		External Pressure (inch H20)						External Pres. Drop	
		0.0	0.5	0.0	0.1	0.2	0.3	0.4	0.5	0.0	0.5
DF 800	8 FPI	640	580	1000	885	910	940	965	860	1230	1030
	14 FPI	630	550	930	830	860	880	910	800	1110	920
DF 1000	8 FPI	720	630	1130	1030	1060	1090	1110	1000	1430	1200
	14 FPI	700	600	1100	960	1000	1030	1060	900	1380	1070
DF 1200	8 FPI	1230	1050	1730	1450	1530	1600	1680	1370	2020	1600
	14 FPI	1170	1000	1530	1270	1340	1400	1470	1200	1720	1300
DF 1400	8 FPI	1250	1100	1830	1600	1680	1730	1780	1500	2190	1770
	14 FPI	1220	1050	1700	1410	1490	1560	1620	1340	1920	1540
DF 1600	8 FPI	1270	1130	1920	1700	1760	1810	1870	1630	2330	1937
	14 FPI	1250	1100	1780	1550	1620	1690	1740	1470	2100	1700
DF 1800	8 FPI	1400	1220	2200	1940	2020	2080	2140	1840	2700	2200
	14 FPI	1370	1170	2050	1770	1840	1920	2000	1650	2400	1860
DF 2000	8 FPI	1450	1250	2250	2050	2110	2180	2210	1980	2870	2400
	14 FPI	1400	1220	2170	1910	2000	2050	2110	1810	2600	2150

GIL Tajhiz Tahvieh Company / Rasht - Iran
WWW.GILTAJHIZ.ir _ Tel: +98911 431 0051 _ +9813 3325 1250

Example (General)

Unit Selection Procedure:

1. Determining exact unit airflow: Enter Table 2 on page 4. Select the nearest Model.
2. Calculate the face velocity, FV using the face area, FA from Table 1 on page 4:

$$FV = \frac{CFM}{FA}$$

3. Determine the appropriate correction factors. (Table 7, 8, 9 and 10), (Figures 1, 2 and 3 on page 12), (Interpolation is allowed when Needed.)
4. Correct the specified total capacity.

$$Q = \frac{\text{Required Total or Sensible Load}}{\text{Correction Factors}}$$

5. Enter the tables of ratings with Q (Tables 3, 4, 5 and 6 on pages 7~11) and check out for the Selected model. (Repeat steps 1 to 5 to find the suitable unit.)
6. Find the actual ratings (Net real working capacity in the location and conditions of the project.)

$$Q_{actual} = \text{Table Ratings} \times \text{Correction Factors}$$

(There is one exception: C_S Is always applied to both Total and Sensible load but when C_S is used only for correcting the wet bulb temperature (not water temp. or evaporating temp.), it is applied only to Total load.)

7. A - Determining water flow rate (GPM)
   B - Determining leaving air dry bulb (LDB)
   C - Determining leaving air enthalpy (H_2)
   (By having H_1 from Table 11 on page15)
   D - Determining leaving air wet bulb temp. (LWB)

$$A - \text{Water GPM} = \frac{Q_T}{500 \times \Delta T}$$

B - Q_S = 1.08 (CFM) (EDB - LDB)
C - Q_T = 4.5 (CFM) (H_1 - H_2)
D - Interpolating in Table 11 (by having H_2) for leaving air wet bulb temp. (LWB)

GIL Tajhiz Tahvieh Company / Rasht - Iran
WWW.GILTAJHIZ.ir _ Tel: +98911 431 0051 _ +9813 3325 1250

Example 1

Summer System Requirement

Given:
Air Flow Rate ..... **1000 CFM**
External Static Pressure ..... **0.3"**
Total / Sensible Load ..... **27 /19 kBtu/hr**
Altitude of Installation **1250m**
Entering Air Temperature (EAT) ... **80°F DB/ 70°F WB**
Evaporating Temperature..... **45/55°F**

Solution:

1. Table 2 on page 4: Based on airflow, selecting Model DF 1000: 4 Rows, 8 FPI: Air flow = 1110 CFM

(Selection is based on "Medium" condition in order to account for additional capacity.)

2. $FV = \frac{CFM}{FA} = \frac{1110\ CFM}{2.45\ ft.^2} = 453\ FPM$

3. Correction factors:
(T.7 P.11) Total load correction factor = CT = 1.06
(T.7 P.11) Sensible load correction factor = C_S= 1.07
(T.8 P.11) Altitude correction factor = C_2 = 0.95
(T.9 P.11) Fin material correction factor = C_3 = 1.0
(T.10 P.11) Refrigerant correction factor = C_4 = 1.0
(F.1 P.12) Air wet bulb correction factor = C_5 = 1.15

4. Correcting the required load

$$QT = \frac{\text{Total Load}}{CT \times C_2 \times C_5} = \frac{27\ KBtu/hr.}{1.06 \times 0.95 \times 1.15} = 23.3\ kBtu/hr.$$

$$Q_S = \frac{\text{Selection Load}}{C_S \times C_2} = \frac{19\ KBtu/hr.}{1.07 \times 0.95} = 18.7\ kBtu/hr.$$

(For correcting the wet bulb temp. Only. Is applied just to total load.)

5. Entering the table 3 on page 7
Model DF 1000: 80°F DB/ 67°F WB, 4 rows, 8 FPI:
QT : 26.2 kBtu/hr. → 23.3 kBtu/hr. (required)
QS : 21.0 kBtu/hr. → 18.7 kBtu/hr. (required)

So SDF-10 (4 rows, 8FPI, and half Cir.) is approved.

6. Actual ratings:
Total: QT = 26.2 ×1.06× 1.15 × 0.95 = 30.3 kBtu/hr.
Sensible: Qs = 21.0 × 1.07 × 0.95 = 21.3 kBtu/hr.

7. A - Water flow GPM = $\frac{30300}{500 \times 10}$ = 6.1GPM

B - LDB = 80- $\frac{21300}{1.08 \times 1110}$ = 62.2 °F

C - H2 = 36.9 - $\frac{30300}{4.5 \times 1110}$ = 30.8 Btu/lb.

D - On Table 11 on pages 15 by H2 and Altitude of 1250m

LWB = 63.1 °F

(Because of the correction factor approximations, the exact temperature sometimes is obtained a little different. The LWB is about 62°F in this case.)

GIL Tajhiz Tahvieh Company / Rasht - Iran
WWW.GILTAJHIZ.ir _ Tel: +98911 431 0051 _ +9813 3325 1250

Example 2

Summer System Requirement

Given:
Air Flow Rate ..... 1600 CFM
External Static Pressure ..... 0.2"
Total / Sensible Load ..... 42 /31 kBtu/hr
Altitude of Installation 1250m
Entering Air Temperature (EAT) ... 80°F DB/ 67°F WB
Evaporating Temperature..... 50°F

Solution:

1. Table 2 on page 4: Based on airflow, selecting Model DF 1200: 4 Rows, 14 FPI: Air flow = 1650 CFM

(Selection is based on "Medium" condition in order to account for additional capacity.)

2. $FV = \frac{CFM}{FA} = \frac{1650\ CFM}{2.87\ ft.^2} = 575\ FPM$

3. Correction factors:

(T.7 P.11) Total load correction factor = C_T = 1.19
(T.7 P.11) Sensible load correction factor = C_S = 1.25
(T.8 P.11) Altitude correction factor = C_2 = 0.95
(T.9 P.11) Fin material correction factor = C_3 = 1.0
(T.10 P.11) Refrigerant correction factor = C_4 = 1.0
(F.3 P.12) Evaporating Temp. corr. Fac. = C_5 = 0.85

4. Correcting the required load

$$QT = \frac{\text{Total Load}}{C_T \times C_2 \times C_5} = \frac{27\ KBtu/hr.}{1.19 \times 0.95 \times 1.85} = 43.7\ kBtu/hr.$$

$$Q_S = \frac{\text{Selection Load}}{C_S \times C_2 \times C_5} = \frac{31\ KBtu/hr.}{1.07 \times 0.95} = 30.7\ kBtu/hr.$$

5. Entering the table 3 on page 7
   Model DF 1200: 80°F DB/67°F WB, 4 rows, 14 FPI:
   QT : 36.0 kBtu/hr. ← 43.7 kBtu/hr. (required)
   QS : 27.3 kBtu/hr. ← 30.7 kBtu/hr. (required)
   So SDF-12 (4 rows, 14FPI and Half Cir. failed.)

Repeating steps 1 to 5:
For SDF-12 (6 rows, 8FPI and half Cir.):
QT: 37.3 kBtu/hr. ← 44.4 kBtu/hr. (required)
QS: 28.9 kBtu/hr. → 31.5 kBtu/hr. (required)

So SDF-12 (6 rows, 8FPI and half Cir.) failed.
SDF-12 (6 rows, 14FPI and half Cir.) failed.
SDF-14 (4 rows, 14FPI and half Cir.) failed.
SDF-14 (6 rows, 8FPI and half Cir.) failed.
QT : 48.7 kBtu/hr. → 45.2 kBtu/hr. (required)
QS : 36.7 kBtu/hr. → 32.3 kBtu/hr. (required)

SDF-14 (6 rows, 14FPI and half Cir.) is approved.

(The actual air flow is 1560 cfm at Medium rotational speed of the fan.)

6. Actual ratings for SDF-14 (6 rows, 14FPI & half Cir.):

$Q_T = 48.7 \times 1.15 \times 0.85 \times 0.95 = 45.2$ kBtu/hr.
$Q_S = 36.7 \times 1.19 \times 0.85 \times 0.95 = 35.3$ kBtu/hr.

7. $A - \text{Water flow GPM} = \frac{45200}{500 \times 10} = 9.0GPM$

$$B - LDB = 80 - \frac{35.3 \times 1000}{1.08 \times 1560} = 59.0\ °F$$

$$C - H2 = 34.13 - \frac{45.2 \times 1000}{4.5 \times 1560} = 27.7\ Btu/lb.$$

D - On Table 11 by H2 and Altitude of 1250m

LWB = 59.1 °F

(Because of the correction factor approximations, the exact temperature somet imes is obtained a little different. The LWB is about 59°F in this case.)

GIL Tajhiz Tahvieh Company / Rasht - Iran
WWW.GILTAJHIZ.ir _ Tel: +98911 431 0051 _ +9813 3325 1250

Example 3

Winter System Requirement (Hot water Coil)

Given:

Air Flow Rate ..... **1800 CFM**
External Static Pressure ..... **0.3"**
Total / Sensible Load ..... **160 kBtu/hr**
Altitude of Installation **0m**
Entering Air Temperature (EAT) ..... **80°F DB**
Evaporating Temperature..... **180/160°F**

Solution:

1. Table 2 on page 4: Based on airflow, selecting Model DF 1600:

   4 Rows, 14 FPI: Air flow = 1790 CFM (Selection is based on "Medium" condi t ion in order to account For additional capacity.)

2. $FV = \frac{CFM}{FA} = \frac{1650\ CFM}{2.87\ ft.^2} = 575\ FPM$

3. Correction factors:

(T.7 P.11) Total load correction factor = C_T = 1.07
(T.8 P.11) Altitude correction factor = C_2 = 1.0
(T.9 P.11) Fin material correction factor = C_3 = 1.0

4. Correcting the required load

$$QT = \frac{\text{Total Load}}{C_T \times C_2 \times C_5} = \frac{160\ KBtu/hr}{1.07 \times 1.0 \times 1.0} = 149.5\ kBtu/hr.$$

5. Entering the table 5 on page 10

   Model DF 1600: 80°F DB, 4 rows, 14 FPI:
   QT : 149.8 kBtu/hr. → 149.5 kBtu/hr. (required)

So SDF-16 (4 rows, 14FPI & Half Cir. is approved.

6. Actual ratings for SDF-16 (4 rows, 14FPI & half Cir.):

   $Q_T = 149.8 \times 1.07 \times 1.0 \times 1.0 = 160.3\ kBtu/hr.$

7. A - Water flow GPM $= \frac{160300}{500 \times 20} = 16.0GPM$

$$B - LDB = 80 - \frac{160300}{1.08 \times 1790} = 162.9\ °F$$

GIL Tajhiz Tahvieh Company / Rasht - Iran
WWW.GILTAJHIZ.ir _ Tel: +98911 431 0051 _ +9813 3325 1250

CHILLED WATER COOLING COIL RATINGS
(EWT 45°F, LWT 55°F)

AzarNasim H.V.A.C SYSTEMS

Table 3

Model	Nominal Air CFM	Entering Dry Bulb Temp. (°F)	Entering Wet Bulb Temp. (°F)	Spacing	Circuit	4 Rows				6 Rows			
						Total Cooling Capacity (kBtu/hr)	Sensible Cooling Capacity (kBtu/hr)	Water Flow (GPM)	Water Pressure Drop Ft H₂O	Total Cooling Capacity (kBtu/hr)	Sensible Cooling Capacity (kBtu/hr)	Water Flow (GPM)	Water Pressure Drop Ft H₂O
DF 800	800	75	63	8 FPI	Half	13.9	13.9	2.8	0.25	19.7	17.1	4.0	0.6
				14 FPI	Half	17.3	16.4	3.5	0.4	24.3	19.5	4.9	0.9
		80	67	8 FPI	Half	19.5[1]	16.3	3.9	0.5	28.9	20.8	5.8	1.3
				14 FPI	Half	25.0	19.5	5.0	0.7	34.4	23.6	6.9	1.7
DF 1000	1000	75	63	8 FPI	Half	18.0[2]	18.0	3.6	0.4	25.5	21.7	5.1	1.1
				14 FPI	Half	23.0	21.0	4.6	0.6	31.5	24.8	6.3	1.6
		80	67	8 FPI	Half	26.2	21.0	5.2	0.8	37.5	26.6	7.5	2.1
				14 FPI	Half	33.2	25.1	6.6	1.2	44.6	30.1	8.9	2.9
DF 1200	1200	75	63	8 FPI	Full	17.8	17.8	3.6	0.08	25.3	23.9	5.1	0.2
					Half	22.0	21.2	4.4	0.6	31.7	26.5	6.3	1.7
				14 FPI	Full	22.2	22.2	4.4	0.1	31.6	27.2	6.3	0.3
					Half	28.9	25.7	5.8	1.0	39.1	30.4	7.8	2.4
		80	67	8 FPI	Full	23.5	22.2	4.7	0.1	36.8	28.6	7.4	0.4
					Half	33.4	25.8	6.7	1.3	46.6	32.5	9.3	3.3
				14 FPI	Full	30.2	26.5	6.0	0.2	45.1	32.7	9.0	0.5
					Half	42.0	31.0	8.4	2.0	55.2	36.8	11.0	4.5
DF 1400	1400	75	63	8 FPI	Full	21.8	21.8	4.4	0.1	31.0	28.5	6.2	0.3
					Half	26.5	25.0	5.3	0.9	37.8	31.3	7.6	2.4
				14 FPI	Full	27.2	27.2	5.4	0.2	38.5	32.5	7.7	0.4
					Half	35.1	35.1	7.0	1.5	46.5	35.8	9.3	3.5
		80	67	8 FPI	Full	29.1	26.4	5.8	0.2	45.1	34.2	9.0	0.5
					Half	40.4	30.6	8.1	2.0	55.4	38.3	11.1	4.8
				14 FPI	Full	37.8	31.8	7.6	0.3	54.8	39.0	11.0	0.8
					Half	51.2	37.0	10.2	3.0	66.1	43.7	13.2	6.6
DF 1600	1600	75	63	8 FPI	Full	25.9	25.9	5.2	0.2	36.8[3]	33.1	7.4	0.4
					Half	31.0	28.9	6.2	1.3	44.9	36.4	9.0	3.4
				14 FPI	Full	32.3	32.3	6.5	0.2	45.5	37.7	9.1	0.6
					Half	41.2	35.3	8.2	2.1	54.2	41.4	10.8	4.8
		80	67	8 FPI	Full	35.1[4]	30.8	7.0	0.3	53.9	40.0	10.8	0.8
					Half	47.5	35.5	9.5	2.7	64.6	44.3	12.9	6.6
				14 FPI	Full	45.4	37.3	9.1	0.4	65.2	45.6	13.1	1.1
					Half	60.3	42.9	12.1	4.5	77.0	50.6	15.4	9.1
DF 1800	1800	75	63	8 FPI	Full	31.0	31.0	6.2	0.2	43.8	38.3	8.8	0.6
					Half	37.3	34.4	7.9	2.1	52.8	41.9	10.6	4.9
				14 FPI	Full	38.8	36.8	7.8	0.4	54.3	43.8	10.9	0.9
					Half	48.9	40.8	9.8	3.1	63.5	47.7	12.7	6.9
		80	67	8 FPI	Full	43.7	36.3	8.7	0.4	64.3	46.5	12.9	1.2
					Half	56.3	41.2	11.3	4.0	75.3	51.0	15.1	9.4
				14 FPI	Full	56.0	43.8	11.2	0.7	77.2	52.9	15.4	1.6
					Half	71.3	49.8	14.2	6.1	89.4	58.1	17.9	12.8
DF 2000	2000	75	63	8 FPI	Full	36.1	36.1	7.2	0.3	50.9	43.4	10.2	0.8
					Half	44.5	38.6	8.9	2.8	60.7	47.5	12.1	6.8
				14 FPI	Full	45.9	42.0	9.2	0.5	62.9	49.8	12.6	1.2
					Half	56.4	46.3	11.3	4.2	72.9	54.0	14.6	9.4
		80	67	8 FPI	Full	52.4	41.9	10.5	0.6	75.1	53.2	15.0	1.6
					Half	65.3	47.0	13.1	5.5	85.7	57.6	17.1	12.6
				14 FPI	Full	66.3	50.2	13.2	1.0	89.2	60.3	17.8	2.2
					Half	82.4	56.6	16.5	8.4	101.4	65.5	20.3	17.1

+ Shaded regions show that water velocity or air face velocity is out of standard ARI 410 & 440 limits. (1~8 FPS) (200~800 fpm) 1 2 3 4: Under this condition, if the actual airflow is more than respectively 900, 1300, 2000 and 2200 CFM, then the velocity will be in the range of valid (ARI) Velocities + All the ratings are calculated at altitude 0 (Sea Lev

GIL Tajhiz Tahvieh Company / Rasht - Iran
WWW.GILTAJHIZ.ir _ Tel: +98911 431 0051 _ +9813 3325 1250

Table 4

Model	Nominal Air CFM	Entering Dry Bulb Temp. (°F)	Entering Wet Bulb Temp. (°F)	Spacing	4 Rows			6 Rows		
					Total Cooling Capacity (kBtu/hr)	Sensible Cooling Capacity (kBtu/hr)	Leaving Air Dry Bulb Temp. (°F)	Total Cooling Capacity (kBtu/hr)	Sensible Cooling Capacity (kBtu/hr)	Leaving Air Dry Bulb Temp. (°F)
DF 800	800	75	63	8 FPI	12.9	11.8	61.3	15.9	13.8	59.0
				14 FPI	15.6	13.9	58.9	19.2	16.3	56.2
		80	67	8 FPI	17.3	14.5	63.3	21.1	16.9	60.4
				14 FPI	20.6	16.2	61.3	25.0	18.9	58.1
DF 1000	1000	75	63	8 FPI	16.6	15.6	60.6	20.3	18.2	58.1
				14 FPI	19.8	18.2	58.1	24.2	21.3	55.3
		80	67	8 FPI	22.5	18.9	62.5	27.1	22.1	59.6
				14 FPI	26.6	21.0	60.5	32.1	24.5	57.3
DF 1200	1200	75	63	8 FPI	22.4	20.7	59.0	27.7	24.5	56.1
				14 FPI	26.5	23.5	56.9	32.9	27.8	53.6
		80	67	8 FPI	30.6	24.8	60.8	37.3	28.9	57.7
				14 FPI	36.0	27.3	59.0	43.8	31.8	55.5
DF 1400	1400	75	63	8 FPI	24.7	23.4	59.5	30.9	27.5	56.8
				14 FPI	29.6	27.1	57.1	37.0	31.9	53.9
		80	67	8 FPI	33.9	28.4	61.2	41.0	33.1	58.1
				14 FPI	40.3	31.5	59.2	48.7	36.7	55.7
DF 1600	1600	75	63	8 FPI	29.5	27.7	59.0	36.9	32.6	56.1
				14 FPI	35.2	31.8	56.6	44.1	37.4	53.3
		80	67	8 FPI	40.5	33.3	60.7	51.0	39.8	56.9
				14 FPI	48.0	37·0	58.6	60.5	44.2	54.4
DF 1800	1800	75	63	8 FPI	35.5	32.6	58.2	44.4	38.3	55.3
				14 FPI	41.9	36.8	56.1	52.3	43.2	52.8
		80	67	8 FPI	48.2	38.7	60.1	60.1	46.0	56.3
				14 FPI	57.1	42.9	57.9	71.2	50.9	53.8
DF 2000	2000	75	63	8 FPI	42.9	38.3	57.3	53.6	45.0	54.2
				14 FPI	50.5	42.8	55.2	63.1	50.3	51.7
		80	67	8 FPI	57.9	45.1	59.1	72.3	53.1	55.4
				14 FPI	68.5	49.9	56.9	85.6	58.8	52.8

+ All the ratings are calculated at altitude 0 (Sea Level) with Aluminums fins (corrugated plate fins) and based on ARI standard 410. For other Altitudes or Fin Material please refer to Correction Factor Tables.

GIL Tajhiz Tahvieh Company / Rasht - Iran
WWW.GILTAJHIZ.ir _ Tel: +98911 431 0051 _ +9813 3325 1250

HOT WATER COIL RATINGS

(same cooling coils with hot water ratings)(EWT 180°F, LWT 160°F)

AzarNasim H.V.A.C SYSTEMS

Table 5

Model	Nominal Air CFM	Entering Dry Bulb Temp. (°F)	Spacing	Circuit	4 Rows				6 Rows			
					Total Heating Capacity (kBtu/hr)	Leaving Air Dry Bulb Temp. (°F)	Water Flow (GPM)	Water Pressure Drop Ft H·O	Total Cooling Capacity (kBtu/hr)	Leaving Air Dry Bulb Temp. (°F)	Water Flow (GPM)	Water Pressure Drop Ft H·O
DF 800	800	50	8 FPI	Half	82.7	145.1	8·5	1.48	97.6	162.3	10.0	2.7
			14 FPI	Half	98.8	163.6	10.2	2.0	108.0	174.2	11.1	3.3
		60	8 FPI	Half	75.6	146.9	7·8	1.3	89.6	163.0	9·2	2.3
			14 FPI	Half	90.5	164.1	9·3	1.7	99.4	174.3	10.2	2.8
		70	8 FPI	Half	68.5	148.8	7·0	1.1	81.5	163.7	8·4	2.0
			14 FPI	Half	82.2	164.6	8·5	1.5	90.7	174.3	9·3	2.4
		80	8 FPI	Half	61.3	150.6	6·3	0.9	73.4	164.5	7·6	1.6
			14 FPI	Half	73.9	165.0	7·6	1.2	82.0	174.3	8·4	2.0
DF 1000	1000	50	8 FPI	Half	103.1	144.9	10.6	2.3	121.8	162.1	12.5	4.3
			14 FPI	Half	123.6	163.8	12.7	3.2	135.1	174.3	13.9	5.2
		60	8 FPI	Half	94.4	146.9	9·7	2.0	111.8	162.9	11.5	3.7
			14 FPI	Half	113.4	164.3	11.7	2.8	124.3	174.4	12.8	4.5
		70	8 FPI	Half	85.6	148.8	8·8	1.7	101.8	163.7	10.5	3.1
			14 FPI	Half	103.1	164.9	11	2.3	113.5	174.4	11.7	3.8
		80	8 FPI	Half	76.8	150.7	7·9	1.4	91.8	164.4	9·4	2.6
			14 FPI	Half	92.8	165.4	9·5	1.9	102.7	174.5	10.6	3.2
DF 1200	1200	50	8 FPI	Full	118.5	140.8	12.2	0.6	142.4	159.2	14.6	1.0
				Half	123.8	144.9	12.7	3.4	146.0	161.9	15.0	6.3
			14 FPI	Full	143.2	159.8	14.7	0.8	159.5	172.3	16.4	1.2
				Half	148.7	164.0	15.3	4.7	162.2	174.4	16.7	7.6
		60	8 FPI	Full	108.1	142.8	11.1	0.5	130.5	160.0	13.4	0.9
				Half	113.3	146.9	11.6	2.9	134.1	162.8	13.8	5.4
			14 FPI	Full	130.9	160.4	13.5	0.7	146.5	172.3	15.1	1.1
				Half	136.4	164.6	14.0	4.1	149.3	174.4	15.3	6.6
		70	8 FPI	Full	97.6	144.9	10.0	0.4	118.5	160.9	12.2	0.7
				Half	102.8	148.8	10.6	2.4	122.1	163.6	12.5	4.6
			14 FPI	Full	118.6	160.9	12.2	0.6	133.5	172.3	13.7	0.9
				Half	124.1	165.1	12.8	3.4	136.3	174.5	14.0	5.6
		80	8 FPI	Full	87.2	146.9	9·0	0.3	106.5	161.7	11.0	0.6
				Half	92.3	150.8	9·5	2.0	110.1	164.4	11.3	3.8
			14 FPI	Full	106.3	161.5	10.9	0.5	120.4	172.3	12.4	0.8
				Half	111.8	165.7	11.5	2.8	123.4	174.6	12.7	4.7
DF 1400	1400	50	8 FPI	Full	138.8	141.2	14.3	0.8	166.5	159.4	17.1	1.4
				Half	144.4	144.9	14.8	4.7	170.3	161.9	17.5	8.8
			14 FPI	Full	168.0	160.4	17.3	1.1	186.5	172.6	19.2	1.7
				Half	173.7	164.1	17.8	6.6	189.4	174.4	19.5	10·6
		60	8 FPI	Full	126.7	143.3	13.0	0.7	152.6	160.3	15.7	1.2
				Half	132.2	146.9	13.6	4.0	156.4	162.8	16.1	7.5
			14 FPI	Full	153.7	161.0	15.8	0.9	171.4	172.6	17.6	1.5
				Half	159.4	164.7	16.4	5.6	174.3	174.5	17.9	9.2
		70	8 FPI	Full	114.6	145.3	11.8	0.5	138.7	161.2	14.3	1.0
				Half	120.1	148.9	12.3	3.4	142.5	163.6	14.6	6.4
			14 FPI	Full	139.4	161.6	14.3	0.8	156.3	172.7	16.1	1.3
				Half	145.1	165.3	14.9	4.8	159.2	174.6	16.4	7.8
		80	8 FPI	Full	102.5	147.4	10.5	0.4	124.8	162.0	12.8	0.8
				Half	107.9	150.9	11.1	2.8	128.6	164.5	13.2	5.3
			14 FPI	Full	125.0	162.1	12.8	0.6	141.1	172.7	14.5	1.0
				Half	130.7	165.9	13.4	3.9	144.1	174.7	14.8	6.5

+ All the ratings are calculated at altitude 0 (Sea Level) with Aluminum fins (corrugated plate fins) and based on ARI standard 410.
+ For other Altitudes or Fin Materials please refer to Correction Factor Tables.

GIL Tajhiz Tahvieh Company / Rasht - Iran
WWW.GILTAJHIZ.ir _ Tel: +98911 431 0051 _ +9813 3325 1250

HOT WATER COIL RATINGS

(same cooling coils with hot water ratings) (EWT 180°F, LWT 160°F)

Table 5

Model	Nominal Air CFM	Entering Dry Bulb Temp. (°F)	Spacing	Circuit	4 Rows				6 Rows			
					Total Heating Capacity (kBtu/hr)	Leaving Air Dry Bulb Temp. (°F)	Water Flow (GPM)	Water Pressure Drop Ft H²O	Total Cooling Capacity (kBtu/hr)	Leaving Air Dry Bulb Temp. (°F)	Water Flow (GPM)	Water Pressure Drop Ft H²O
DF 1600	1200	50	8 FPI	Full	159.3	141.6	16.4	1.0	190.7	159.6	19.6	1.9
				Half	165.0	144.9	17.0	6.3	194.6	161.9	20.0	11.7
			14 FPI	Full	192.8	160.9	19.8	1.5	213.6	172.8	21.9	2.3
				Half	198.7	164.3	20.4	8.8	216.5	174.5	22.2	14.2
		60	8 FPI	Full	145.5	143.6	14.6	0.9	174.8	160.5	18.0	1.6
				Half	151.2	146.9	15.5	5.4	178.7	162.8	18.4	10.1
			14 FPI	Full	176.5	161.5	18.1	1.2	196.3	172.9	20.2	2.0
				Half	182.4	164.9	18.7	7.5	199.3	174.6	20.5	12.3
		70	8 FPI	Full	131.7	145.7	13.5	0.7	159.0	161.4	16.3	1.4
				Half	137.3	149.0	14.1	4.5	162.9	163.6	16.7	8.5
			14 FPI	Full	160.2	162.1	16.5	1.0	179.0	172.9	18.4	1.7
				Half	166.1	165.5	17.1	6.4	182.1	174.7	18.7	10.4
		80	8 FPI	Full	117.9	147.8	12.1	0.6	143.1	162.3	14.7	1.1
				Half	123.4	151.0	12.7	3.7	147.0	164.5	15.1	7.1
			14 FPI	Full	143.8	162.7	14.8	0.9	161.7	173.0	16.6	1.4
				Half	149.8	166.1	15.4	5.3	164.9	174.8	16.9	8.7
DF 1800	1800	50	8 FPI	Full	182.9	143.5	18.8	1.4	217.2	161.0	22.3	2.5
				Half	188.6	146.4	19.4	8.5	22.1	163.0	22.7	15.8
			14 FPI	Full	220.2	162.5	22.6	1.9	242.0	173.7	24.9	3.1
				Half	225.9	165.5	23.2	11.8	244.7	175.1	25.1	19.1
		60	8 FPI	Full	167.2	145.5	17.2	1.2	199.2	161.9	20.5	2.2
				Half	172.9	148.4	17.8	7.3	203.1	163.8	20.9	13.6
			14 FPI	Full	201.8	163.1	20.7	1.7	222.6	173.7	22.9	2.6
				Half	207.5	166.1	21.3	10.1	225.4	175.2	23.2	16.4
		70	8 FPI	Full	151.5	147.4	15.6	1.0	181.3	162.7	18.6	1.8
				Half	157.1	150.3	16.1	6.1	185.2	164.6	19.0	11.5
			14 FPI	Full	183.3	163.7	18.8	1.4	203.1	173.8	20.9	2.2
				Half	189.1	166.6	19.4	8.6	206.0	175.3	21.2	14.0
		80	8 FPI	Full	135.8	149.4	14.0	0.8	163.4	163.5	16.8	1.5
				Half	141.1	152.2	14.5	5.1	167.2	165.4	17.2	9.6
			14 FPI	Full	164.8	164.3	16.9	1.2	183.6	173.8	18.9	1.9
				Half	170.6	167.2	17.5	7.1	186.6	175.4	19.2	11.7
DF 2000	2000	50	8 FPI	Full	206.4	144.9	21.2	1.8	243.6	162.1	25.0	3.3
				Half	212.1	147.6	21.8	11.2	247.4	163.8	25.4	20.7
			14 FPI	Full	247.4	163.8	25.4	2.5	270.2	174.3	27.8	4.0
				Half	253.0	166.4	26.0	15.4	272.9	175.5	28.0	24.7
		60	8 FPI	Full	188.8	146.9	19.4	1.6	223.6	162.9	23.0	2.8
				Half	194.5	149.4	20.0	9.6	227.4	164.6	23.4	17.8
			14 FPI	Full	226.8	164.3	23.3	2.2	248.6	174.4	25.5	3.4
				Half	232.4	166.9	23.9	13.2	251.3	175.6	25.8	21.3
		70	8 FPI	Full	171.2	148.8	17.6	1.3	203.6	163.7	20.9	2.4
				Half	176.8	151.3	18.2	8.1	207.4	165.4	21.3	15.1
			14 FPI	Full	206.5	164.9	21.2	1.8	227.0	174.4	23.3	2.9
				Half	211.9	167.5	21.8	11.2	229.8	175.7	23.6	18.1
		80	8 FPI	Full	153.7	150.7	15.8	1·1	183.6	164.4	18.9	2.0
				Half	159.2	153.2	16.4	6.7	187.3	166.2	19.2	12.5
			14 FPI	Full	185.6	165.4	19.1	1.5	205.4	174.5	21.1	2.4
				Half	191.3	168.0	19.7	9.3	208.2	175.8	21.4	15.2

+ All the ratings are calculated at altitude 0 (Sea Level) with Aluminium fins (corrugated plate fins) and based on ARI standard 410. For other Altitudes or Fin Materials please refer to Correction Factor Tables.

GIL Tajhiz Tahvieh Company / Rasht - Iran
WWW.GILTAJHIZ.ir _ Tel: +98911 431 0051 _ +9813 3325 1250

Table 6 — ELECTRICAL COIL

Model	Nominal Air CFM	Air Temperature Rise* (ΔT)														
		5°F					10°F					20°F				
		Heating Capacity (kW)	Phase	Line Curr. (Amp.)	No. of Contr. Steps	No. and Cap. (kw) of Elem.	Heating Capacity (kW)	Phase	Line Curr. (Amp.)	No. of Contr. Steps	No. and Cap. (kw) of Elem.	Heating Capacity (kW)	Phase	Line Curr. (Amp.)	No. of Contr. Steps	No. and Cap. (kw) of Elem.
DF 800	800	1.5	1	7	1	1×1.5	3.0	1	14	2	2×1.5	5.5	1	25	3	2+2+1.5
DF 1000	1000	1.5	1	7	1	1×1.5	3.0	1	14	2	2×1.5	7.0	1	32	3	3+2+2
DF 1200	1200	2.0	1	9	1	1×2	4.0	1	18	2	2+2	8.0	1	36	3	3+3+2
DF 1400	1400	2.0	1	9	1	1×2	5.0	1	23	2	2+3	9.0	1/3	41/24	3	3×3
DF 1600	1600	3.0	1	14	2	2×1.5	5.0	1	23	2	2+3	10.5	1	48	3	3×3+1.5
DF 1800	1800	3.0	1	14	2	2×1.5	6.0	1/3	27/16	3	3×2	12.0	1/3	55/32	3	3×4
DF 2000	2000	3.0	1	14	2	2×1.5	7.0	1	32	3	2+2+3	13.5	1	61	3	3×4+1.5

* air temperature leaving the electrical coil = entering air temperature (before the coil) + ΔT (5 / 10 / 20 °F
+ Azar Nasim does not provide any control device for electrical heater except air flow switch.

Table 7 — COIL FACE VELOCITY CORRECTION FACTOR

Model	Correction type	Face Velocity (FPM)											
		300	350	375	400	425	450	475	500	525	550	600	650
DF 800	Total	0.82	0.94	0.98	1.01	1.05	1.08	1.12	1.15	1.18	1.20	1.26	1.32
	Sensible	0.83	0.92	0.97	1.01	1.05	1.10	1.15	1.19	1.23	1.27	1.34	1.42
DF 1000	Total	0.83	0.92	0.96	0.99	1.03	1.06	1.09	1.13	1.16	1.19	1.24	1.30
	Sensible	0.80	0.90	0.94	0.99	1.04	1.07	1.12	1.16	1.20	1.23	1.31	1.38
DF 1200	Total	0.81	0.90	0.93	0.97	1.01	1.04	1.07	1.10	1.13	1.16	1.22	1.28
	Sensible	0.78	0.88	0.92	0.97	1.01	1.05	1.09	1.13	1.17	1.21	1.28	1.35
DF 1400	Total	0.80	0.88	0.92	0.96	1.00	1.03	1.06	1.09	1.13	1.16	1.22	1.27
	Sensible	0.77	0.87	0.91	0.96	1.00	1.04	1.08	1.12	1.16	1.20	1.26	1.33
DF 1600	Total	0.79	0.88	0.91	0.95	0.99	1.03	1.06	1.09	1.12	1.15	1.21	1.27
	Sensible	0.77	0.86	0.90	0.94	0.99	1.03	1.07	1.10	1.14	1.18	1.25	1.32
DF 1800	Total	0.81	0.90	0.94	0.98	1.01	1.05	1.09	1.12	1.16	1.18	1.25	1.30
	Sensible	0.79	0.88	0.93	0.97	1.01	1.06	1.10	1.14	1.18	1.21	1.29	1.36
DF 2000	Total	0.82	0.91	0.95	0.99	1.04	1.07	1.11	1.14	1.17	1.21	1.27	1.33
	Sensible	0.80	0.90	0.94	0.99	1.02	1.08	1.12	1.16	1.20	1.24	1.31	1.39

Use these correction factors as multipliers to the capacity ratings offered in the tables.

$$\text{Real Capacity KBtu/hr.} = \left[\begin{array}{l}\text{Table}\\ \text{Ratings}\\ \text{KBtu/hr.}\end{array}\right] \times C1 \times C2 \times C3 \times C4 \times C5$$

Table Ratings: Capacity from Tables 3 ~ 6 (pages 7~11)
C1: (CTor CS) Coil Face Velocity Correction Factor from Table 7 (page 11)
C2: (CA) Altitude Correction Factor from Table 8 (page 11)
C3: Fin Material Correction Factor from Table 9 (page 11)
C4: Refrigerant Correction Factor from Table 10 (page 11)
C5: (CWB) Air Wet Bulb or Entering Water or Evaporating FACTOR (C3) Temperature Correction Factor from figures 1~3 (page 12) or
+ Divide your required capacity by these correction factors before you go through the tables.

Table 8 ALTITUDE CORRCTION FACTOR (C2)

ft	m	Capacity Factor
0	0	1
2500	760	0.97
5000	1500	0.94
7500	2300	0.91
10000	3050	0.88

Table 9 FIN MATERIAL CORRECTION FACTOR (C3)

Fin Material	Correction Factor
Al	1
Cu	1.05

Table 10 REFRIGERANT CORRECTION FACTOR (C4)

Refrigerant (Dx Coil)	Correction Factor
R22	1
R134a	0.88
R407c	0.99

GIL Tajhiz Tahvieh Company / Rasht - Iran
WWW.GILTAJHIZ.ir _ Tel: +98911 431 0051 _ +9813 3325 1250

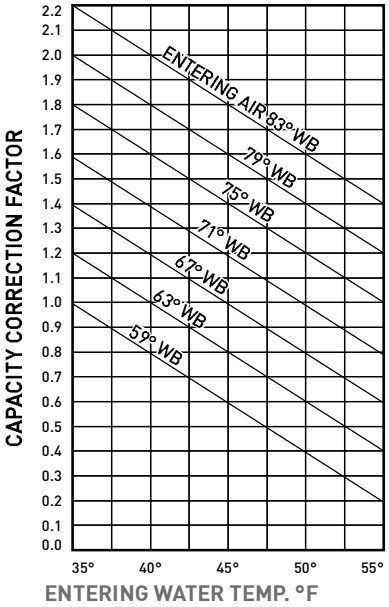

FIGURE 1. CHILLED WATER COIL

CORRECTION FACTOR

Corrected load = load from table 3*correction factor from figure 1
All correction factors are Based on 80/67°F entering dry and wet bulb temp.

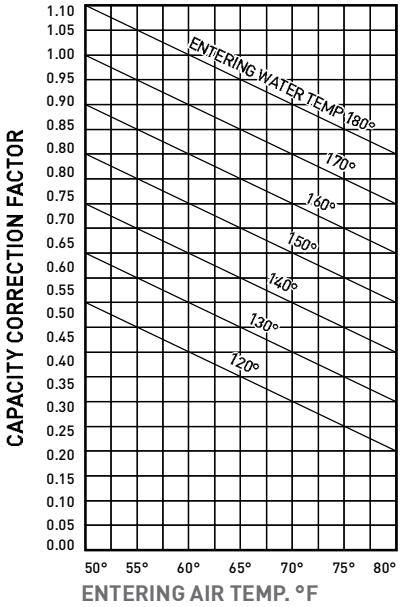

FIGURE 2. HOT WATER COIL

CORRECTION FACTOR

Corrected load = load from table 5*correction factor from figure 2
All correction factors are based on entering air dry bulb = 60°F and entering water = 180°F

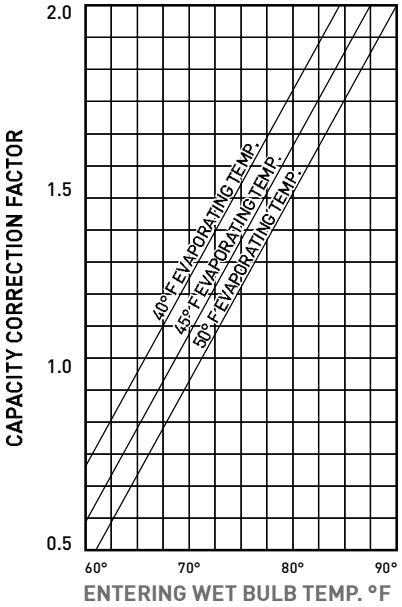

FIGURE 3. DX COIL

CORRECTION FACTOR

Corrected load = load from table 4*correction factor from figure 3
All correction factors are based on 80/67 Entering dry and wet bulb temp. at 45°F Evaporating temp.

CONTROL FEATURES

There are different ways of controlling fan coils:

1. Fan Speed Control a) Manual →
The units are provided with a manual three- fan speed control. (Unit or wall mounted)

2. Water Control Valves a) Manual →
By having hand-operated valves installed in the supply or return water circuit, each unit could be isolated from the whole water system. (Not included)

B - Automatic
The fans could be switched ON/OFF while has been set to one of the three different working condition (Low, Medium or High) by a single-stage thermostat. (Not included) A Four-stage thermostat (including OFF) could also control the fan speed automatically. (Not included)

B - Automatic
Valves could be either solenoid or motor operated. Two or Three way valves also could be used. (Not included) Thermostat could control a solenoid valve or also two-way or Three-way water Valve to set the suitable flow rate of water. (Not included)

3. Electrical Coil Safety Temperature Control
An optional control device could turn off the electrical coil if its temperature rises above a defined limit.(Not included)

GIL Tajhiz Tahvieh Company / Rasht - Iran
WWW.GILTAJHIZ.ir _ Tel: +98911 431 0051 _ +9813 3325 1250

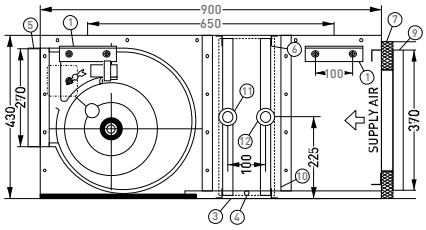

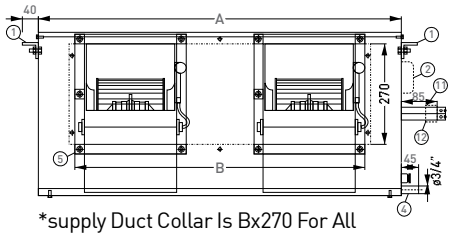

*supply Duct Collar Is Bx270 For All Horizontal Models.

FIGURE 4. EXPOSED HORIZENTAL MODELS

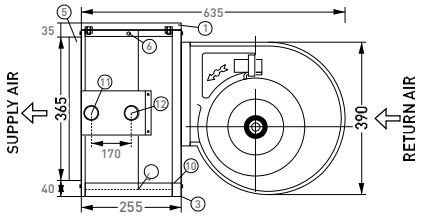

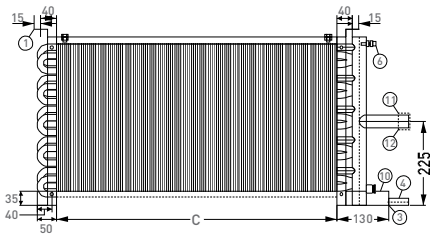

*supply Duct Collar Is Cx365 For All Concealed Horizontal Models.

FIGURE 5. CONCEALED HORIZENTAL MODELS

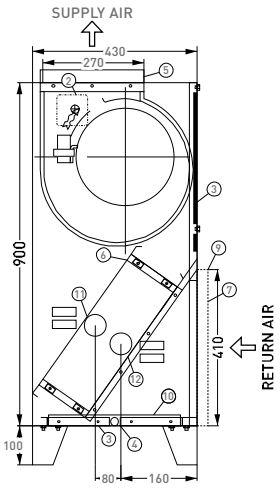

1. MOUNTING BRACKET
2. MOTOR JUNCTION BOX
3. FOAM INSULATION
4. DRAIN CONNECTION
5. SUPPLY DUCT COLLAR
6. AIR VENT
7. FILTER (OPTIONAL)
8. MOUNTING LEGS (OPTIONAL)
9. RETURN DUCT COLLAR
10. DRAIN PAN
11. COIL WATER INLET
12. COIL WATER OUTLET

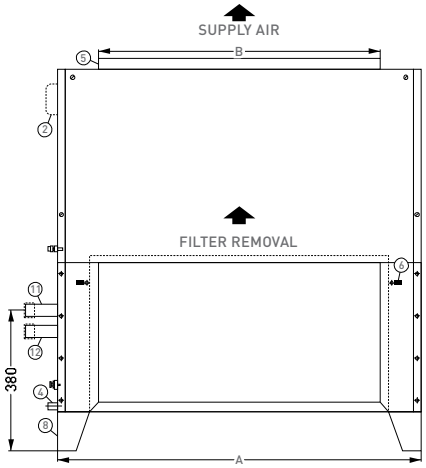

*supply Duct Collar Is Bx270 For All Vertical Models.

Figure 6	EXPOSED VERTICAL FREE STANDING MODELS									
Model	Nominal Air CFM	Number of Fans	A	B	C	Inlet	Outlet	Drain	Unit Weight (kg)	
									Oper.	Net
DF 800	800	1	650	285	500				67	70
DF 1000	1000	1	750	345	600				72	75
DF 1200	1200	1	950	750	700				96	90
DF 1400	1400	2	950	750	800	1"	1"	3/4"	96	100
DF 1600	1600	2	1050	805	900				103	105
DF 1800	1800	2	1200	870	1050				112	118
DF 2000	2000	2	1350	960	1200				120	127

*All dimensions in mm except as specified *All dimensions ± 5 mm *All dimensions are subject to change without notice

GIL Tajhiz Tahvieh Company / Rasht - Iran
WWW.GILTAJHIZ.ir _ Tel: +98911 431 0051 _ +9813 3325 1250

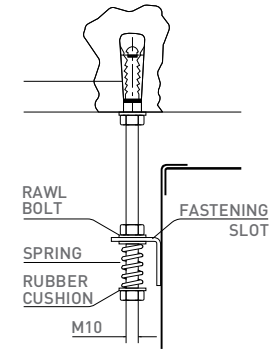

A. FOR CONCRETE CEILING OR HOLLOW CONCRETE BLOCKS

SUSPENDED FASTENING DETAILS DETAIL A

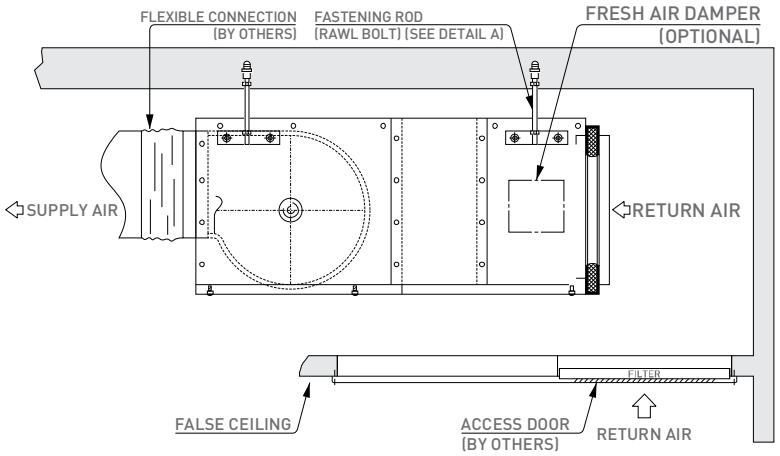

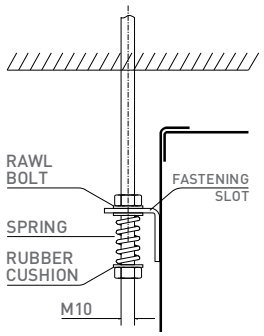

A. FOR CONCRETE CEILING OR HOLLOW CONCRETE BLOCKS

SUSPENDED FASTENING DETAILS DETAIL A

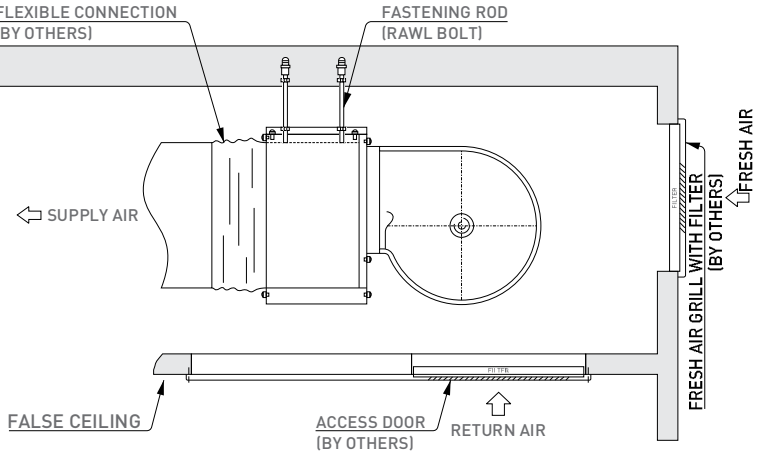

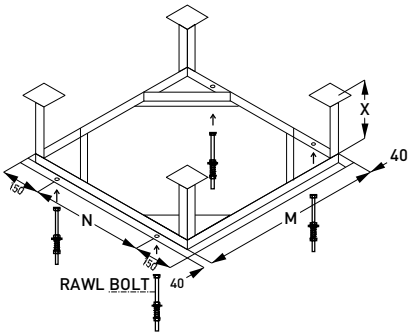

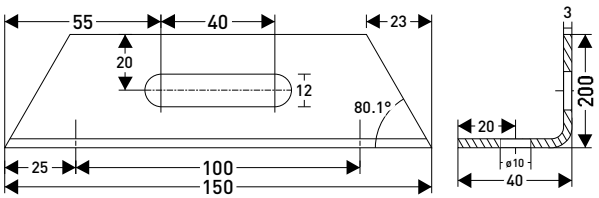

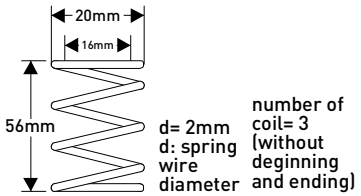

* The frame above is not included with units.
* All dimensions are in mm.
* The units are fastened to the Rawl bolts.
* The square metal plates in the end of hanger will be placed inside concrete before concrete pouring.
* M for Exposed Horizontal models is equal to A in dimension tables on page 13 and for Concealed
* Hori2ontal models is equal to C on the same page.
* N for Exposed Horizontal models is 650 mm and for
* Concealed Horizontal models is 155 mm.
* X should be determined according to ceiling dimentions.
* The thickness of metal angles (profiles) is at least 2 mm.
* 4 fastening rods for each unit are required.

* Using of springs to avoid transmission of vibration to the building is strongly recommended.
* For each spring it is recommended that k = 9 N/mm
* Various types of springs could have a k of 9 N/mm. A common example could be as in the figure

GIL Tajhiz Tahvieh Company / Rasht - Iran
WWW.GILTAJHIZ.ir _ Tel: +98911 431 0051 _ +9813 3325 1250

Table 11 AIR ENTHALPY vs. ALTITUDE

Wet Bulb Temp. °F	Altitude					
	0	1000 (ft.)	2000 (ft.)	3000 (ft.)	4000 (ft.)	5000 (ft.)
	0	315 (m)	625 (m)	940 (m)	1250 (m)	1560 (m)
	Enthalpy of Air (Btu/lb.)					
35	13.01	13.18	13.36	13.54	13.74	13.94
36	13.44	13.62	13.8	14	14.20	14.41
37	13.87	14.06	14.25	14.46	14.67	14.89
38	14.32	14.51	14.71	14.92	15.14	15.37
39	14.77	14.97	15.18	15.4	15.63	15.87
40	15.23	15.44	15.66	15.89	16.12	16.37
41	15.7	15.92	16.14	16.38	16.63	16.89
42	16.17	16.42	16.64	16.88	17.14	17.41
43	16.66	16.89	17.14	17.39	17.66	17.94
44	17.15	17.39	17.65	17.92	18.20	18.49
45	17.65	17.91	18.17	18.45	18.74	19.04
46	18.16	18.43	18.7	18.99	19.29	19.61
47	18.68	18.96	19.25	19.55	19.86	20.19
48	19.21	19.5	19.8	20.11	20.44	20.78
49	19.75	20.05	20.36	20.69	21.03	21.38
50	20.30	20.61	20.94	21.27	21.63	22.00
51	20.86	21.19	21.52	21.87	22.24	22.62
52	21.44	21.77	22.12	22.49	22.87	23.27
53	22.02	22.37	22.73	23.11	23.51	23.92
54	22.62	22.98	23.36	23.75	24.16	24.59
55	23.22	23.6	23.99	24.4	24.83	25.28
56	23.84	24.24	24.64	25.07	25.51	25.98
57	24.48	24.88	25.31	25.75	26.21	26.69
58	25.12	25.55	25.99	26.44	26.92	27.42
59	25.78	26.22	26.68	27.15	27.65	28.17
60	26.46	26.92	27.39	27.88	28.40	28.94
61	27.15	27.62	28.11	28.62	29.16	29.72
62	27.85	28.34	28.85	29.39	29.94	30.52
63	28.57	29.08	29.61	30.16	30.74	31.35
64	29.31	29.84	30.39	30.96	31.56	32.19
65	30.06	30.61	31.18	31.77	32.39	33.05
66	30.83	31.4	31.99	32.61	33.25	33.93
67	31.62	32.21	32.82	33.46	34.13	34.83
68	32.42	33.03	33.67	34.33	35.03	35.75
69	33.25	33.88	34.54	35.32	35.95	36.70
70	34.09	34.74	35.43	36.14	36.89	37.67
71	34.95	35.63	36.34	37.08	37.85	38.67
72	35.83	36.54	37.27	38.04	38.84	39.69
73	36.74	37.46	38.23	39.02	39.86	40.73
74	37.66	38.42	39.2	40.03	40.89	41.80
75	38.61	39.39	40.21	41.06	41.96	42.90
76	39.57	40.39	41.23	42.12	43.05	44.02
77	40.57	41.41	42.29	43.21	44.17	45.18
78	41.58	42.45	43.36	44.32	45.32	46.36
79	42.62	43.53	44.47	45.46	46.49	47.58
80	43.69	44.62	45.6	46.63	47.70	48.83
81	44.78	45.75	46.76	47.83	48.94	50.10
82	45.9	46.91	47.95	49.05	50.21	51.42
83	47.04	48.09	49.18	50.32	51.51	52.76
84	48.22	49.3	50.43	51.61	52.85	54.15
85	49.43	50.33	51.71	52.94	54.22	55.57

Table 12 AIR DENSITY vs. ALTITUDE

Altitude Feet (meters)		Density	Press.
		lb./ft.3	in. w.g
0	0	0.0750	29.92
500	(160)	0.0739	29.38
1000	(310)	0.0728	28.85
1500	(460)	0.0718	28.33
2000	(610)	0.0707	27.82
2500	(770)	0.0697	27.31
3000	(920)	0.0686	26.82
3500	(1070)	0.0676	26.32
4000	(1220)	0.0666	25.84
4500	(1380)	0.0656	25.36
5000	(1530)	0.0646	24.90
5500	(1680)	0.0637	24.43
6000	(1830)	0.0627	23.98
6500	(1990)	0.0617	23.53
7000	(2140)	0.0608	23.09
7500	(2290)	0.0599	22.65
8000	(2440)	0.0590	22.22
8500	(2600)	0.0580	21.80
9000	(2750)	0.0571	21.39
9500	(2900)	0.0563	20.98
10000	(3050)	0.0554	20.58

GIL Tajhiz Tahvieh Company / Rasht - Iran
WWW.GILTAJHIZ.ir _ Tel: +98911 431 0051 _ +9813 3325 1250

Note: